Compliments of:
www.KodakParts.com

775147

Servicing the

KODAK Pocket CAROUSEL 300 Projector

EASTMAN KODAK COMPANY • CUSTOMER EQUIPMENT SERVICES DIVISION
SERVICE ENGINEERING DEPARTMENT
800 LEE ROAD, ROCHESTER, NEW YORK 14650

Compliments of:
www.KodakParts.com

FUNCTIONAL SYSTEM

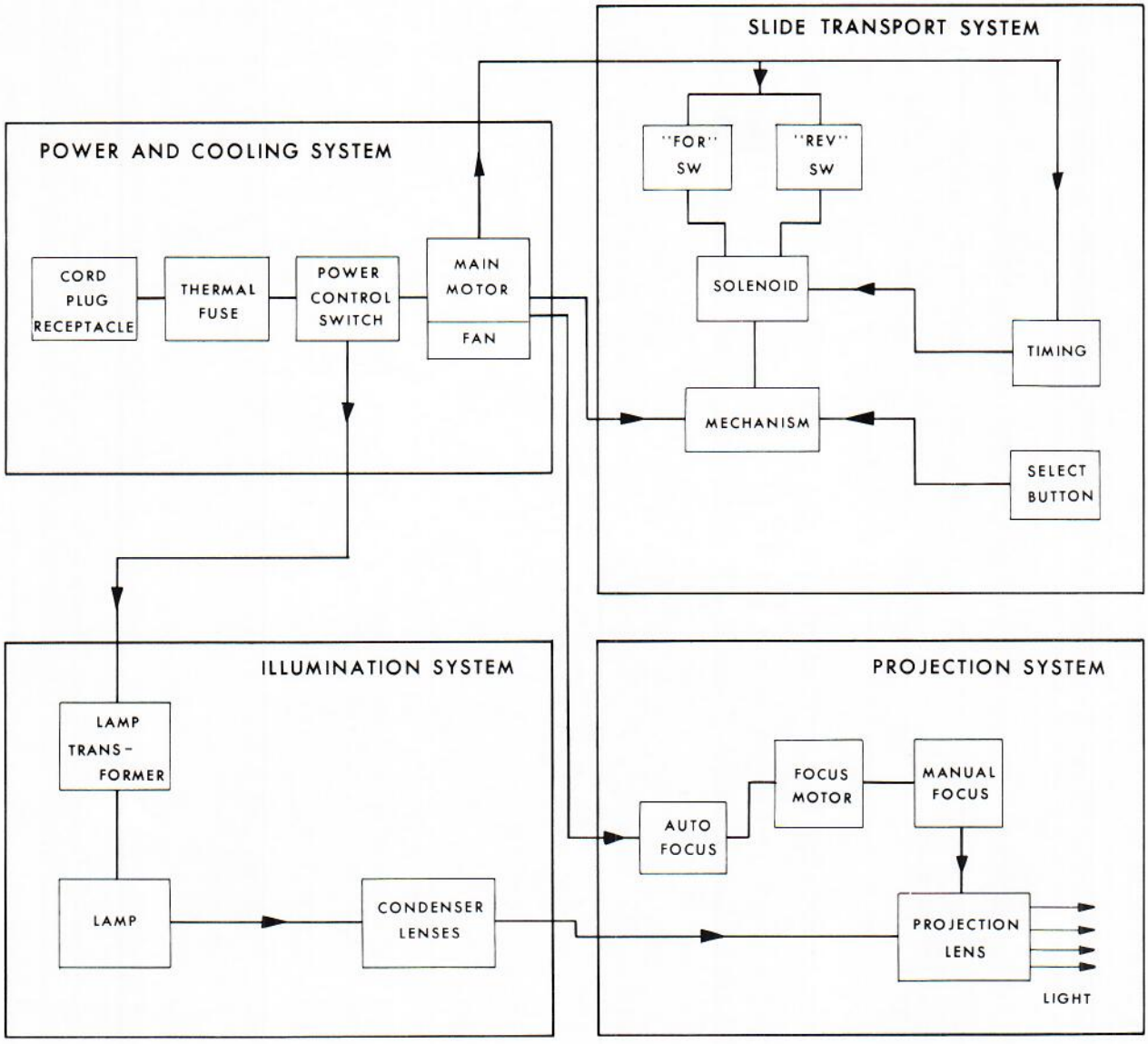

HOUSING SYSTEM

NAMEPLATES

SIDE PANEL

BASE

ELEVATION MECHANISM

LEVELING KNOB ASSEMBLY

EMERGENCY TRAY RELEASE

HANDLE

Compliments of:
www.KodakParts.com

HOW TO EFFECTIVELY USE THE SERVICE MANUAL

GENERAL CHARACTERISTICS

DISASSEMBLY/REASSEMBLY CHART

ILLUSTRATIONS

HOUSING SYSTEM

POWER AND COOLING SYSTEM

ILLUMINATION SYSTEM

PROJECTION SYSTEM

ADJUSTMENTS

SLIDE TRANSPORT SYSTEM

ADJUSTMENTS AND LUBRICATION

TOOLS, CEMENTS AND LUBRICANTS

ELECTRICAL DIAGRAMS

Compliments of:
www.KodakParts.com

KODAK, *CAROUSEL* and *EKTAR* are trademarks.

PLEASE NOTE

The information in this manual is based on the experience and knowledge relating to the subject matter of this manual gained by Eastman Kodak Company prior to publication.

No patent license is granted by this manual.

Eastman Kodak Company's liability on any claim for loss or damage arising out of or connected with the use of this manual, whether or not induced by Kodak, shall in no case exceed the selling price of this equipment, or part thereof, involved in the claim. In no event shall Kodak be liable for consequential or special damages.

Compliments of:
www.KodakParts.com

HOW TO EFFECTIVELY USE THE SERVICE MANUAL

First determine whether or not the customer's projector requires repair by checking its operating characteristics. The operator manual pertaining to it may be of assistance.

If a problem is determined to exist, isolate it on the chart located inside the front cover of the service manual. Define the problem in terms of a specific functional system(s).

Using the tab index, turn to the specific functional system in question. Each functional system contains the following subsections which are designed to help you in your analysis of the problem:

DESCRIPTION

THEORY OF OPERATION (If Applicable)

SPECIFICATIONS

TESTS AND CHECKS (If Applicable)

DISASSEMBLY

A sequence of disassembly steps is described in a block (graphic) format. An illustration showing how to disassemble is indicated in each block. These illustrations are located near the front of the manual. Reassembly is performed in the opposite direction from disassembly. Special reassembly hints, adjustments, and lubrication points are indicated where they occur.

NOTE: A general disassembly block diagram, located as a foldout near the front of the manual, is followed by the illustrations referred to above.

ADJUSTMENTS (If Applicable)

LUBRICATION (If Applicable)

EXAMPLE: Projector Condition: Lamp fails to light but the motor and fan are operating satisfactorily.

Suspected System: Illumination system is isolated on the chart inside the front cover of the manual.

Analysis: Using the tab index, turn to the "Illumination System".

1. Check the lamp; visually, by continuity, by replacement. If it is not defective, go to Step 2.

2. Check for voltage at the solder joints at lamp socket (24V). If proper voltage is present, a defective socket is indicated. If no voltage exists at the socket, check the output voltage of the transformer (24V) at the wire connectors. If no voltage exists, go to Step 3.

Compliments of:
www.KodakParts.com

3. Check the voltage to the transformer. (Refer to "Tests and Checks" for test point location.) If voltage exists, a defective transformer is indicated; replace transformer. If there is no input voltage to the transformer, go to Step 4, which now takes you into the "Power and Cooling System".

4. Check the solder connections at the power switch - lamp position. (Refer to electrical diagram at back of manual for location.) If solder connections are satisfactory, a defective switch is indicated. Replace switch by referring to disassembly portion of "Power and Cooling System".

DISASSEMBLY/REASSEMBLY

The block diagram illustrates a logical means to disassemble the product. The major assemblies are linked with heavy black lines and stemming from there, minor assemblies or parts.

After you have isolated the problem area, find the corresponding block on the chart and choose the shortest path for disassembly (see example). An illustration number showing how to disassemble is indicated in each block.

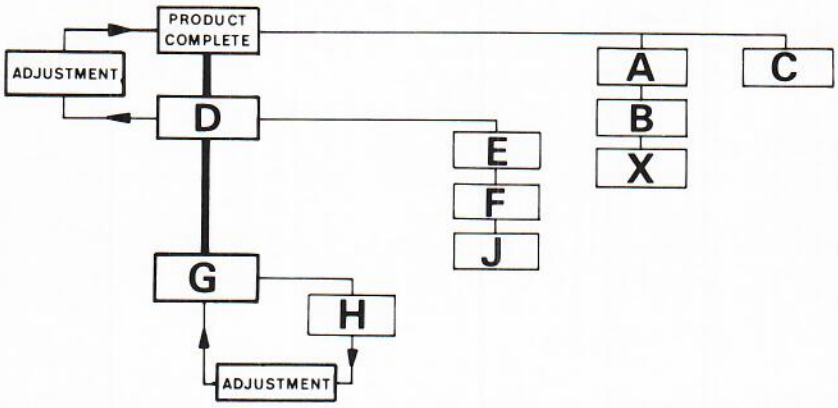

Problem is in Block	Disassembly Sequence
X	Product complete, A, B, X
C	Product complete, C
J	Product complete, D, E, F, J
H	Product complete, D, G, H

Reassembly is performed in the opposite direction from disassembly with the following exception. If in reassembly you pass through a block which has an arrow going out of it, you must go through that block (ex. adjustment).

Problem is in Block	Reassembly Sequence
J	J, F, E, D, Adjustment - Product complete
H	H, Adjustment, G, D, Adjustment Product complete

Special lubrication points and reassembly hints are indicated where they occur.

Compliments of:
www.KodakParts.com

GENERAL CHARACTERISTICS

Operation	- Basically the same as the *KODAK CAROUSEL* 850 Projector only miniaturized.
Power Requirements	- 110-125V ac, 60 Hz only.
Lamp	- ANSI Code DDA, 150W, 24V
Lenses	- *KODAK* Projection *EKTAR* Lens, 2 1/2-inch, *f*/2.8 - *KODAK* Projection *EKTAR* Zoom Lens, 2- to 3-inch, *f*/2.8
Housing	- Molded plastic with vinyl wood-grain paneling. - Projection lens and condenser optics serviced through the removable side panel. - Thumb-wheel elevation through a range of 10 degrees. - Thumb-wheel leveling through a range of 1 degree.
Slide Tray	- Circular, 120-slide capacity for slide mounts 30mm square (1.193 inches) and 1.27mm (.050-inch) thick. Tray-loaded slides are conditioned with temperature-controlled air before projection.
Projector Controls	- Select - Forward and Reverse on projector also, Forward and Reverse by remote control cord.
Focus	- Manual focus - Auto-focus
Cooling	- Fan mounted on motor shaft.
Power Switch	- Off, Fan, and Lamp.

Compliments of:
www.KodakParts.com

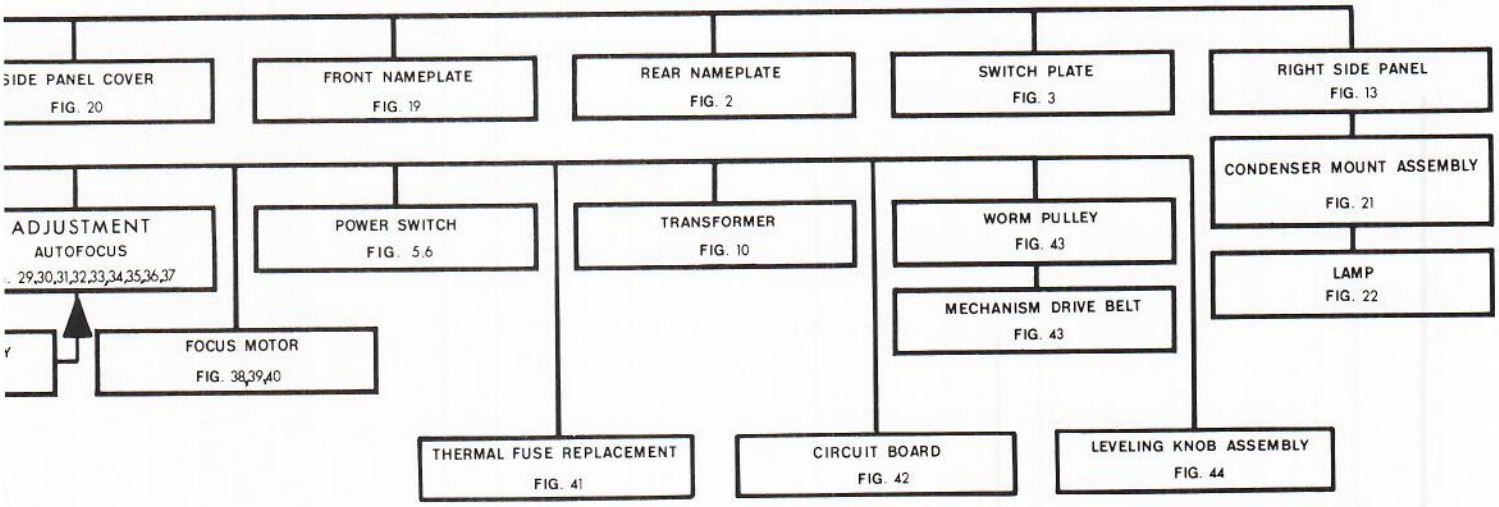

DISASSEMBLY/REASSEMBLY CHART FOR THE KODAK® POCKET INSTAMATIC® 300 PROJECTOR

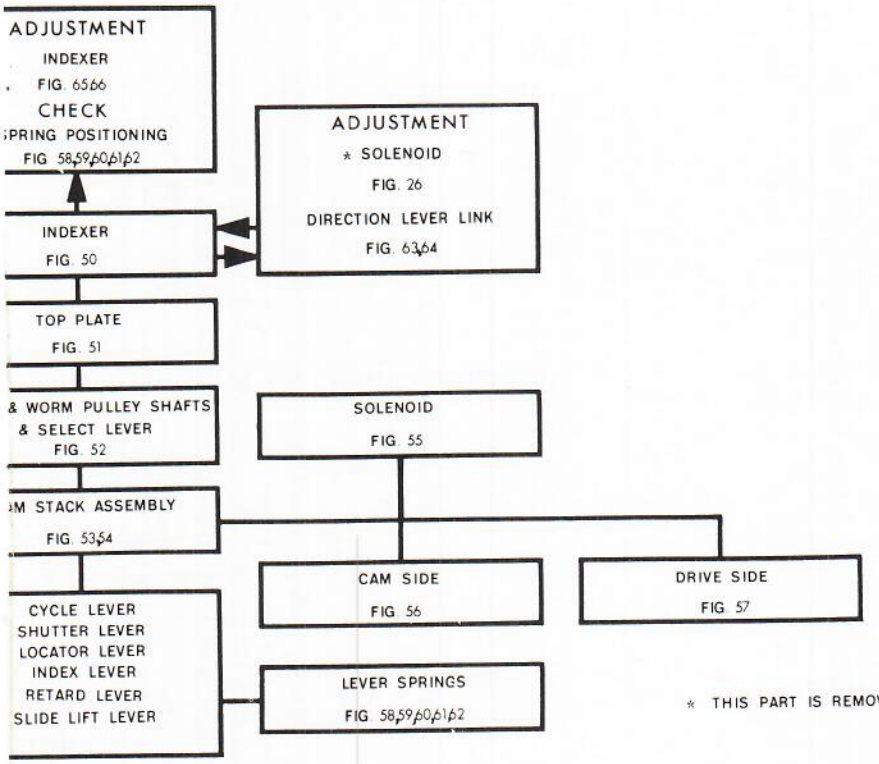

* THIS PART IS REMOVABLE AT AN EARLIER STAGE

Compliments of:
www.KodakParts.com

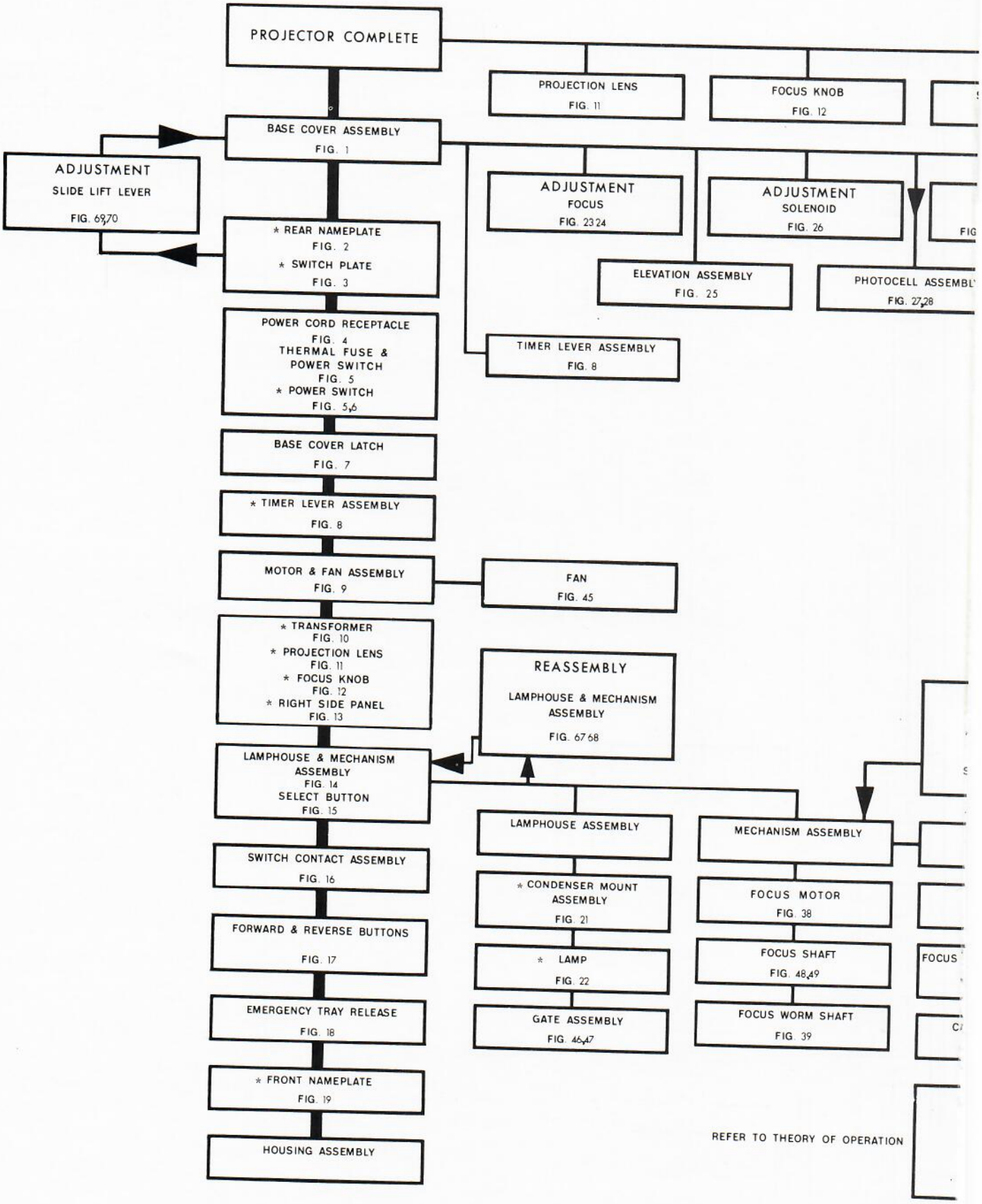

Compliments of:
www.KodakParts.com

Compliments of:
www.KodakParts.com

ILLUSTRATIONS

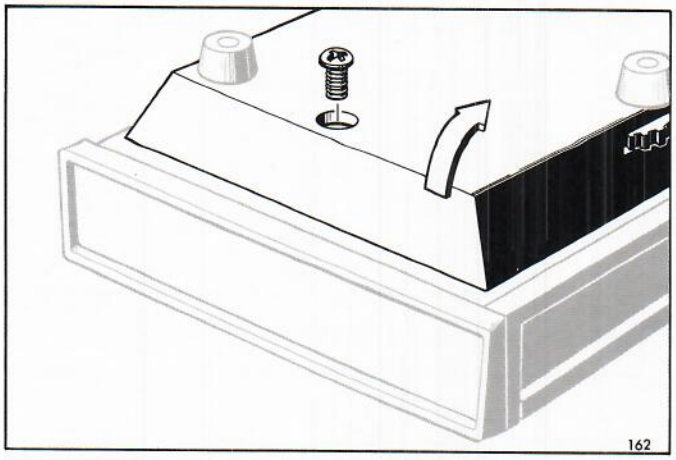

FIGURE 1 -- BASE COVER ASSEMBLY

When replacing, be sure hinge tabs are engaged.

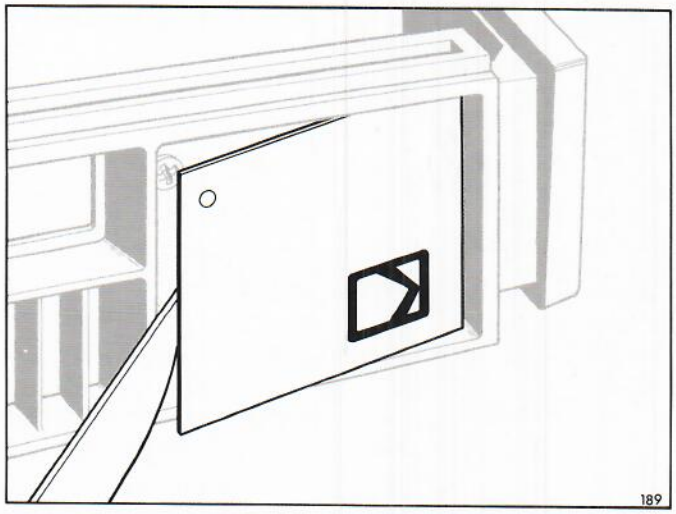

FIGURE 2 -- REAR NAMEPLATE

Nameplates will generally not be reusable. Apply a small amount of cement (part No. 763098) to back surface of new nameplate.

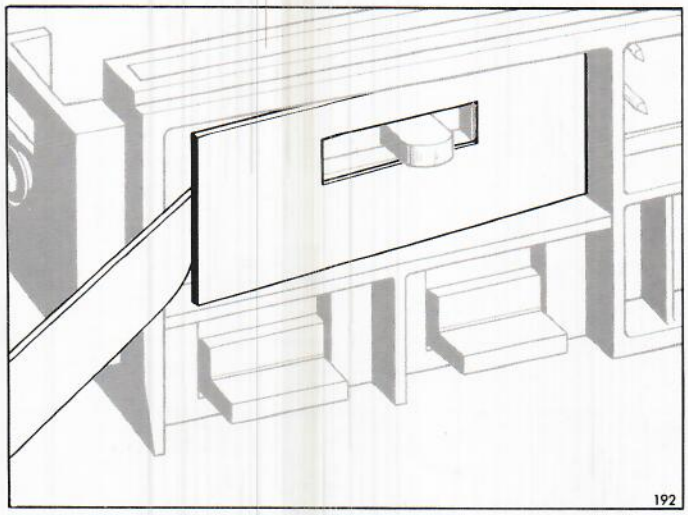

FIGURE 3 -- SWITCH PLATE

Switch plates will generally not be reusable. Apply a small amount of cement (part No. 763098) to back surface of new switch plate.

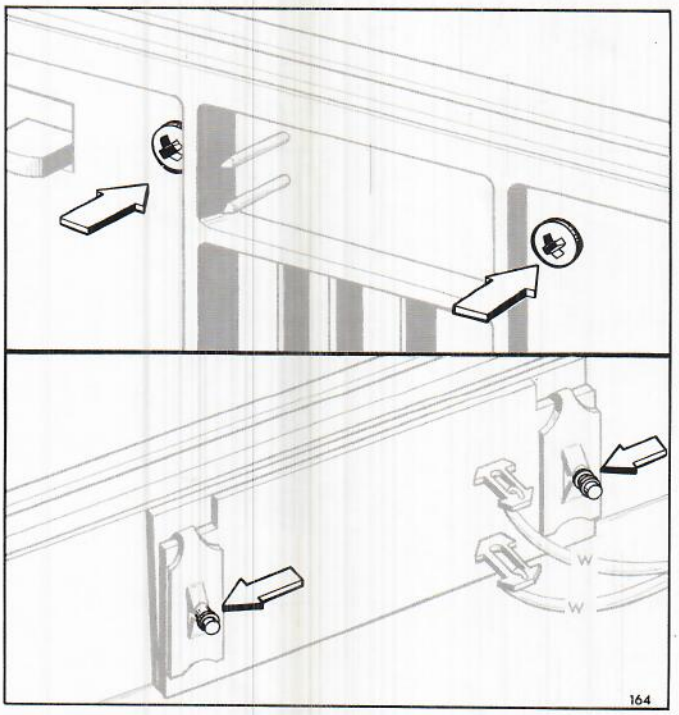

FIGURE 4 -- POWER CORD RECEPTACLE

Compliments of:
www.KodakParts.com

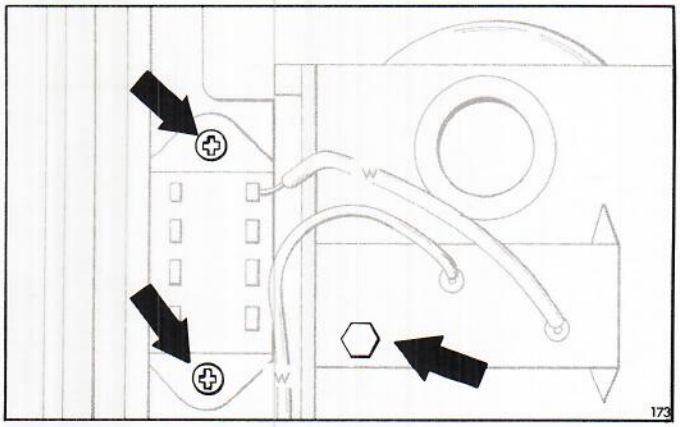

FIGURE 5 -- THERMAL FUSE AND POWER SWITCH

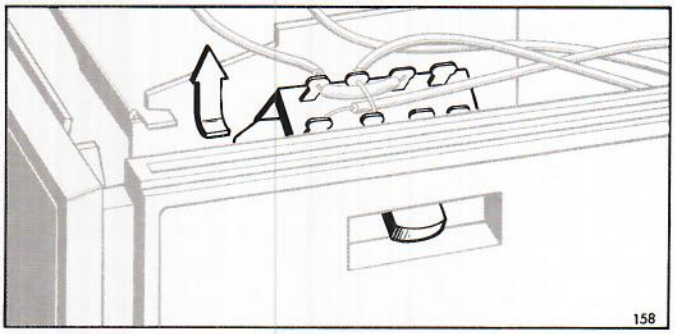

FIGURE 6 -- POWER SWITCH REMOVAL

Guide switch out as shown.

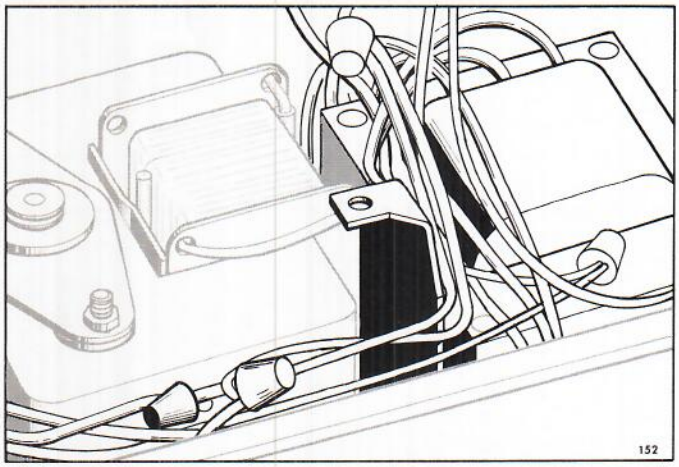

FIGURE 7 -- BASE LATCH AND WIRE DRESSING

The base cover latch is held by one of the screws holding the motor and fan assembly. Upon reassembly, dress the wires as shown.

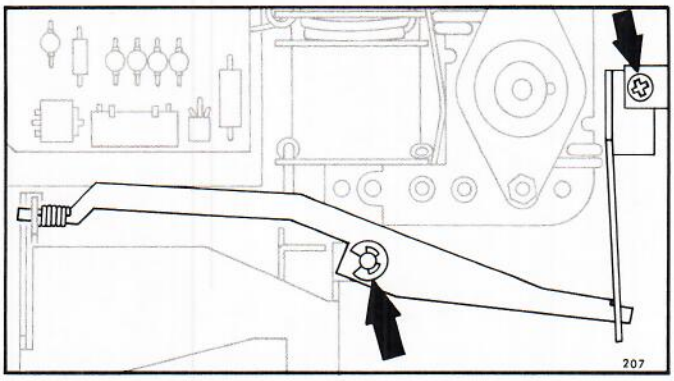

FIGURE 8 -- TIMER LEVER ASSEMBLY

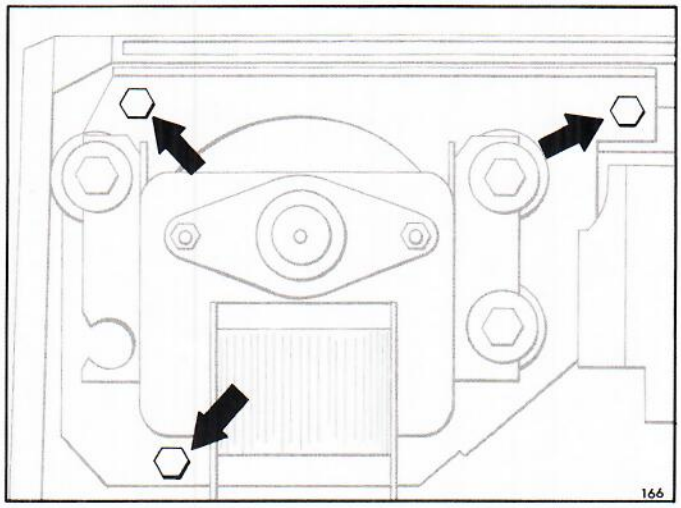

FIGURE 9 -- MOTOR AND FAN ASSEMBLY

NOTE: When reassembling to housing, back-turn the screw upon insertion; then tighten to prevent cross threading of screws in housing.

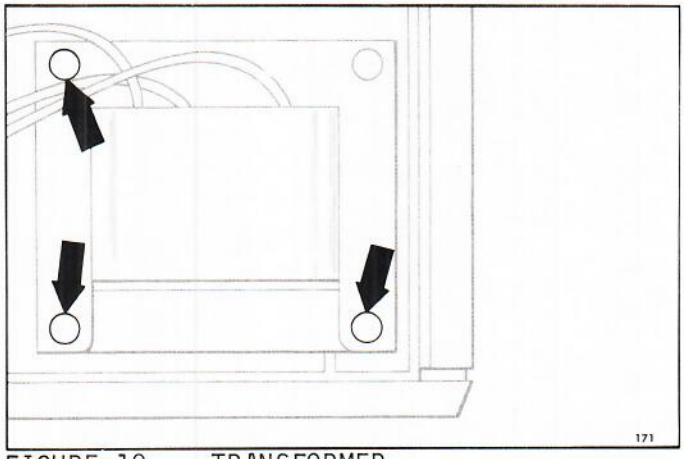

FIGURE 10 -- TRANSFORMER

Compliments of:
www.KodakParts.com

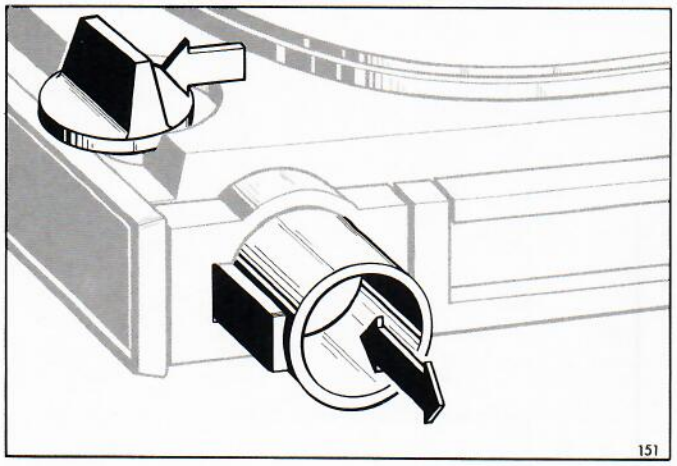

FIGURE 11 -- PROJECTION LENS

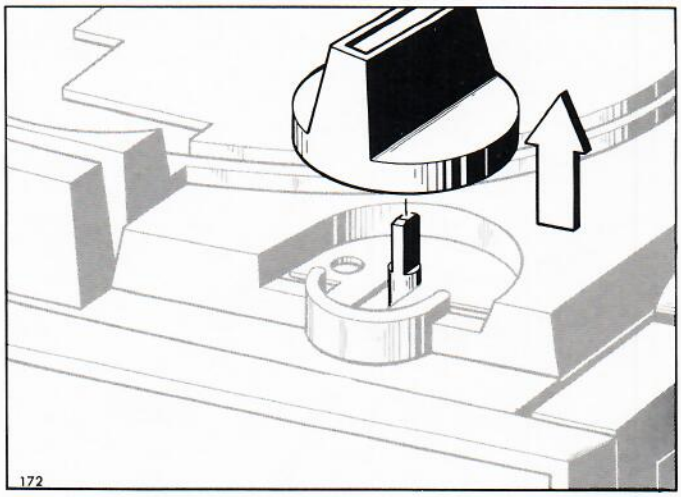

FIGURE 12 -- FOCUS KNOB

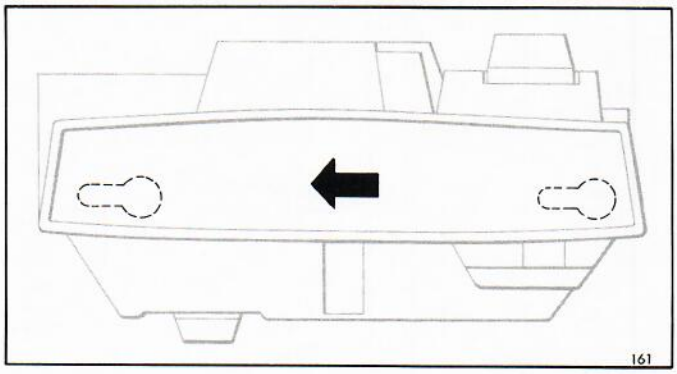

FIGURE 13 -- RIGHT SIDE PANEL

Slides off for access to condenser mount assembly and lamp.

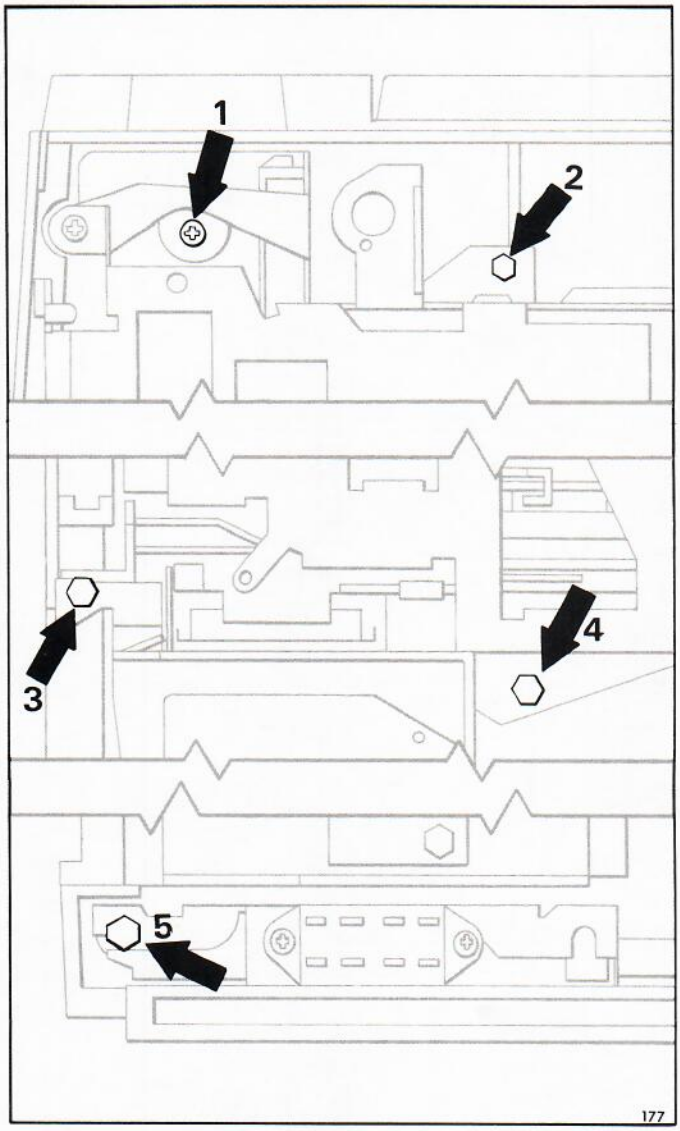

FIGURE 14 -- MECHANISM AND LAMPHOUSE ASSEMBLIES

To remove screw, Numeral 3, be sure condenser mount assembly is removed. All screws are at various levels.

NOTE: When reassembling, we suggest you back-turn the screws upon insertion; then tighten to prevent cross threading of screws in housing.

Compliments of:
www.KodakParts.com

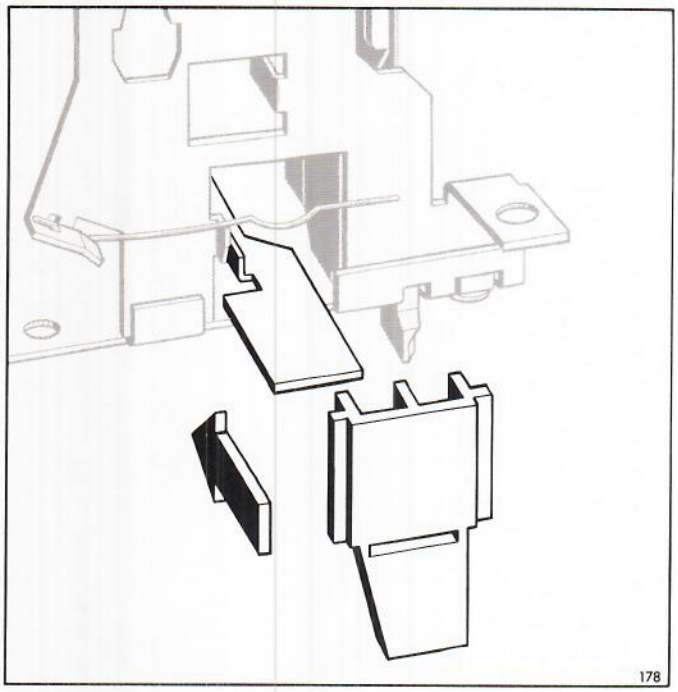

FIGURE 15 -- SELECT BUTTON

NOTE: Place select button on select lever before inserting mechanism assembly into housing.

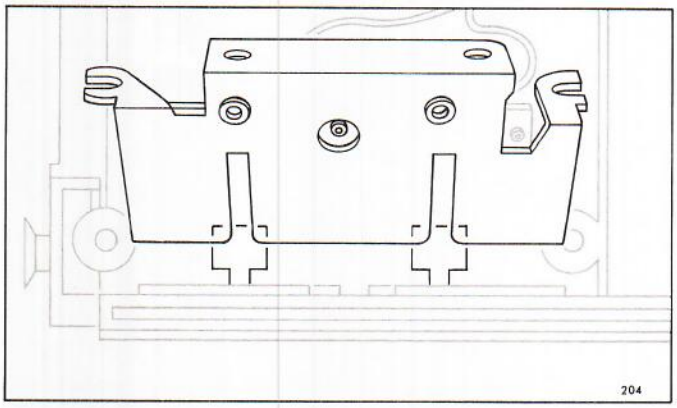

FIGURE 16 -- SWITCH CONTACT ASSEMBLY

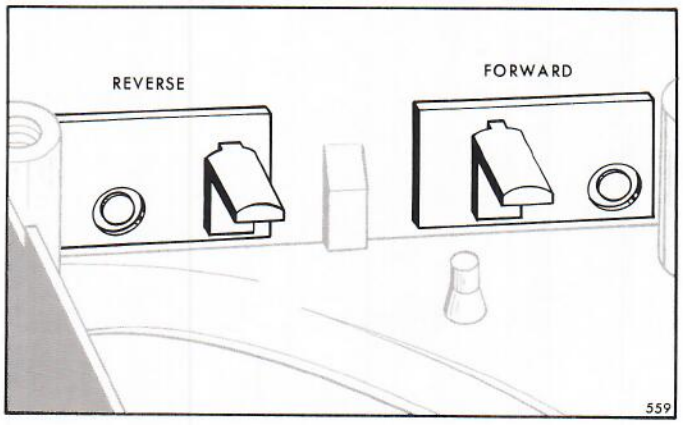

FIGURE 17 -- FORWARD AND REVERSE BUTTONS

Buttons must be in their correct opening or switch contact assembly will not fit properly.

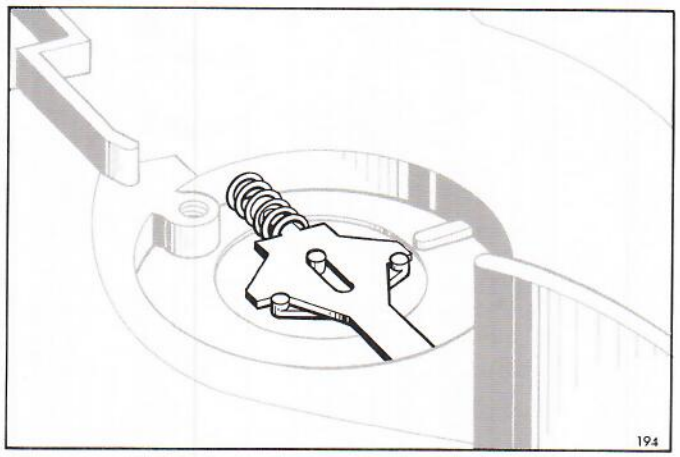

FIGURE 18 -- EMERGENCY TRAY RELEASE

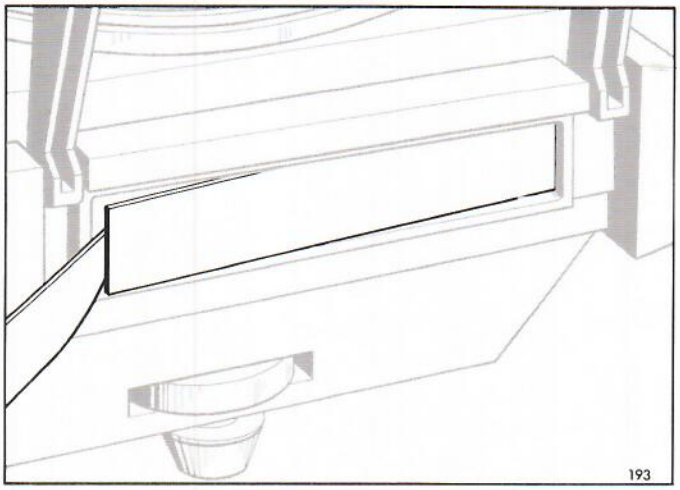

FIGURE 19 -- FRONT NAMEPLATE

Nameplates will generally not be reusable. Apply a small amount of cement (part No. 763098) to back surface of new nameplate.

Compliments of:
www.KodakParts.com

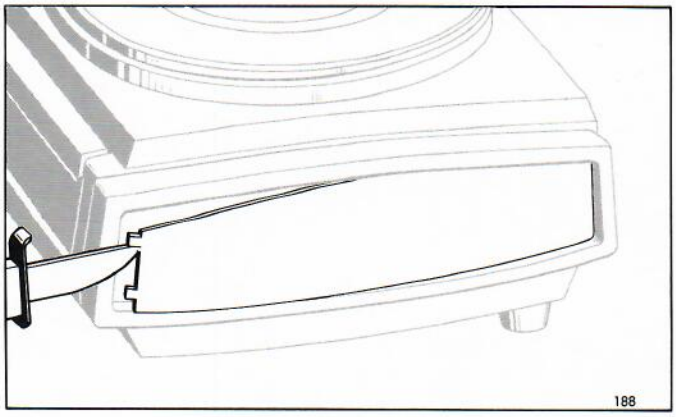

FIGURE 20 -- RIGHT AND LEFT SIDE PANEL COVERS

Panel covers will generally not be reusable. Apply a small amount of cement (part No. 763098) to back surface of new panel cover.

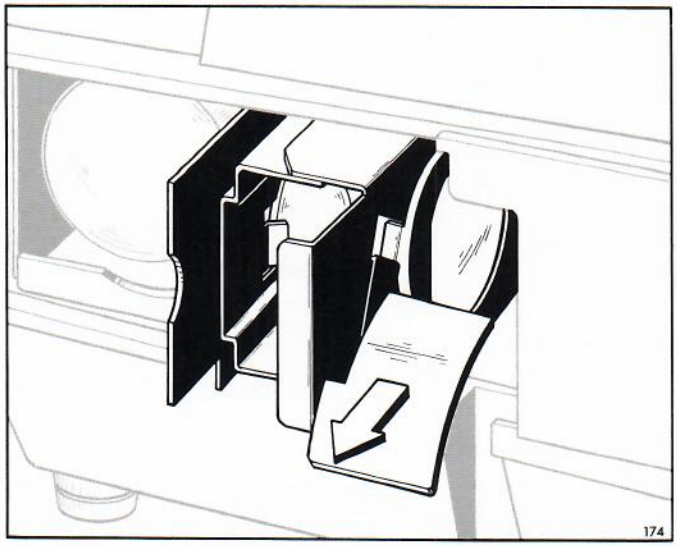

FIGURE 21 -- CONDENSER LENS MOUNT ASSEMBLY

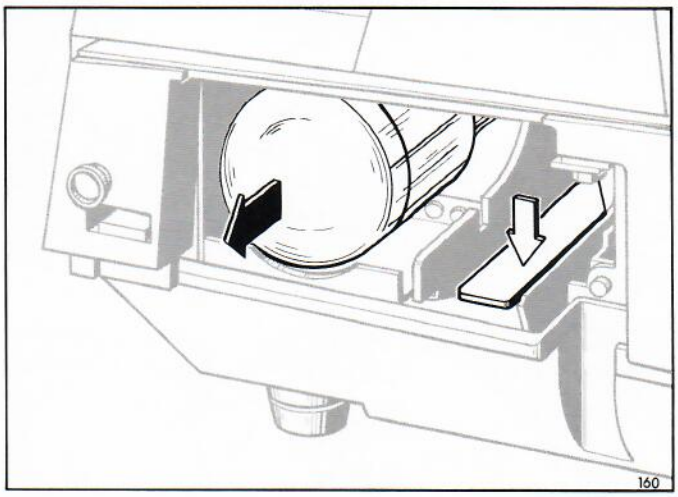

FIGURE 22 -- LAMP

CAUTION: Be sure lamp is fully seated upon reinsertion.

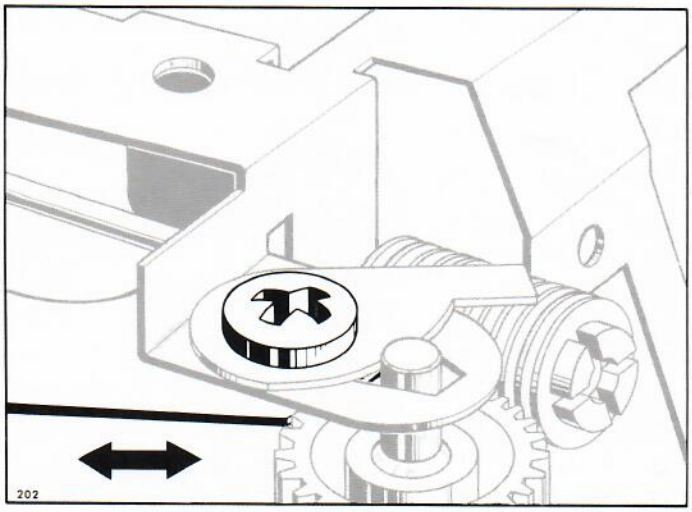

FIGURE 23 -- ADJUST FOCUS (HORIZONTAL)

Loosen screw and move arm left or right. Tighten screw.

Compliments of:
www.KodakParts.com

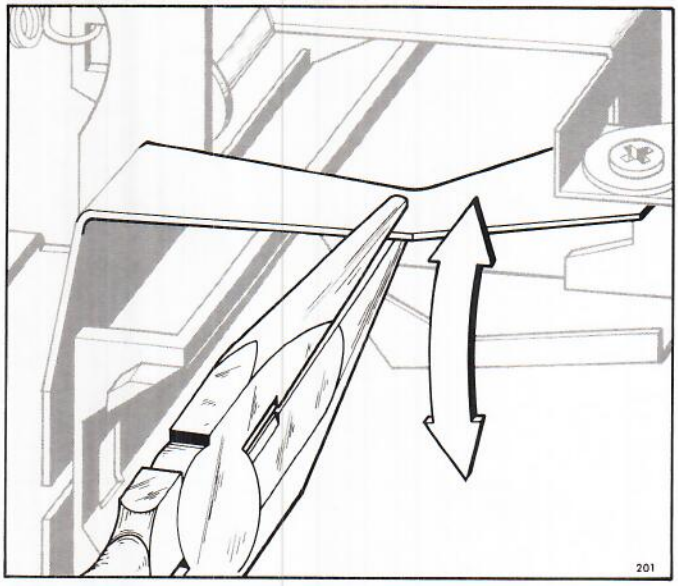

FIGURE 24 -- ADJUST FOCUS (VERTICAL)

Form bracket arm up or down.

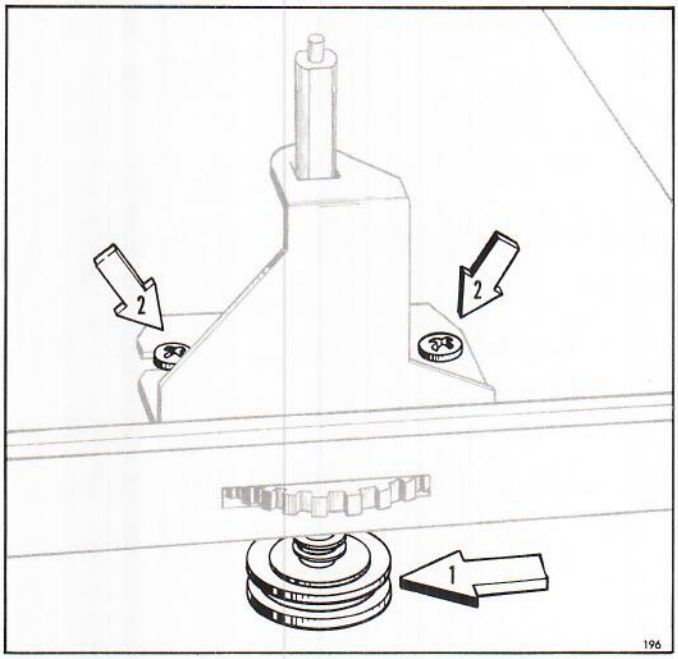

FIGURE 25 -- ELEVATION ASSEMBLY

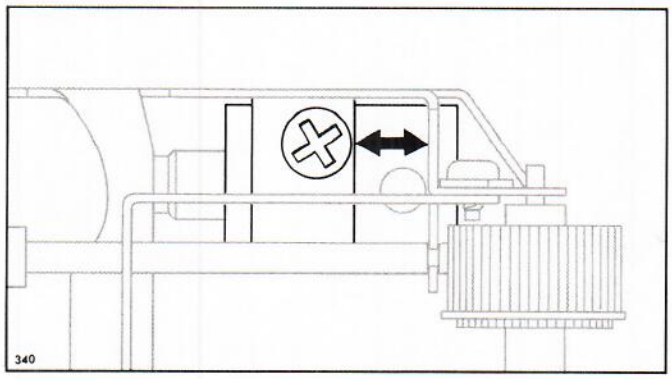

FIGURE 26 -- SOLENOID ADJUSTMENT

Loosen screw; move solenoid either direction as required.

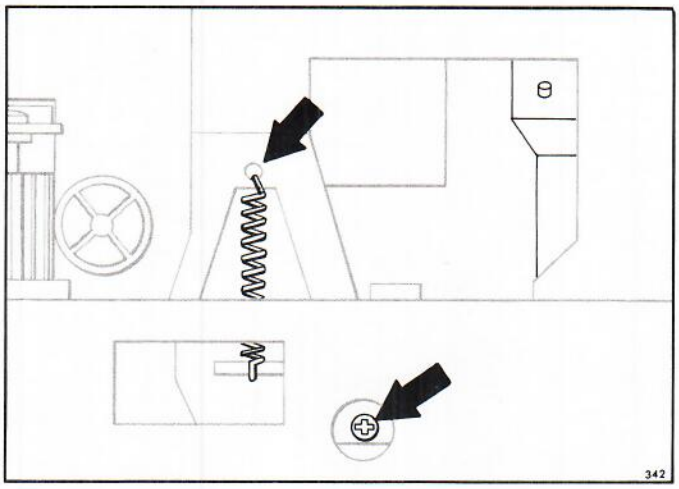

FIGURE 27 -- PHOTOCELL ASSEMBLY

Remove spring and screw.

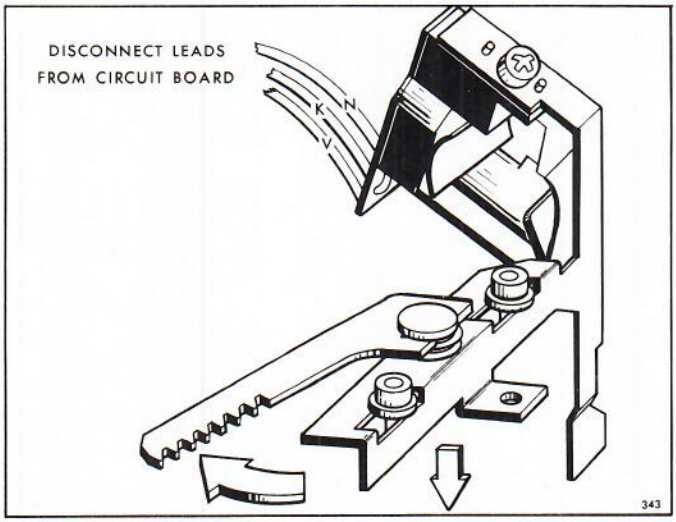

FIGURE 28 -- PHOTOCELL ASSEMBLY

NOTE: Assembly is removed through opening for projection lens.

Compliments of:
www.KodakParts.com

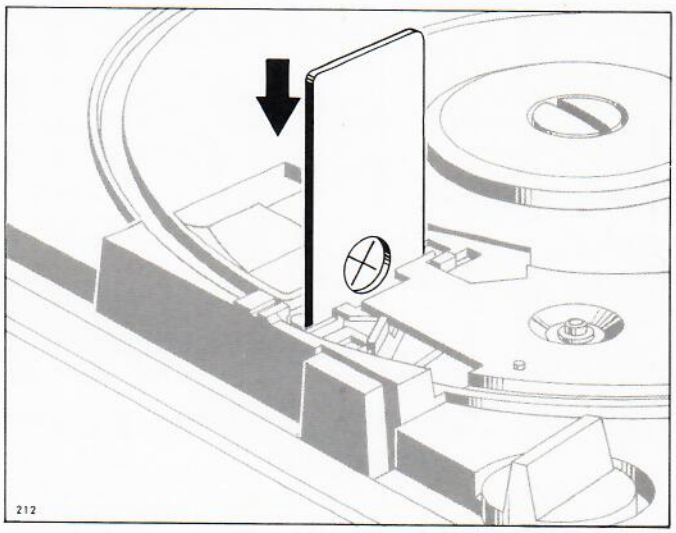

FIGURE 29 -- AUTO-FOCUS GAUGE #TL1808

NOTE: Be sure tool is inserted as shown. This tool remains in this position for adjustments made in Figure 30 through 35.

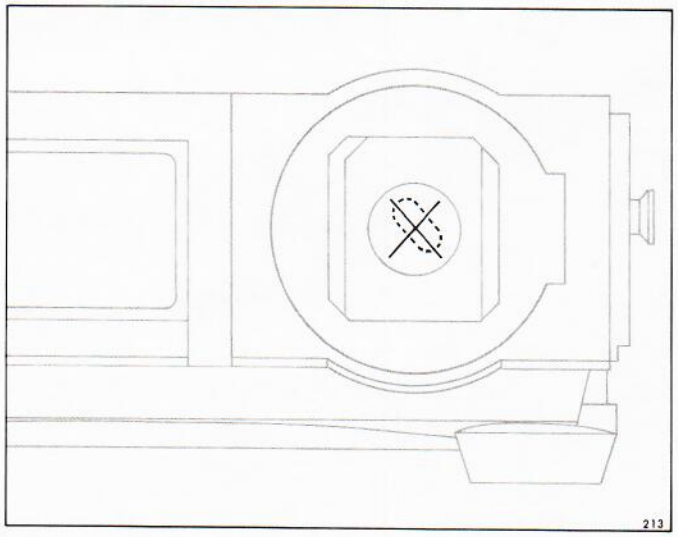

FIGURE 30 -- PROPER IMAGE POSITION

Light image should appear as shown on auto-focus gauge #TL1808.

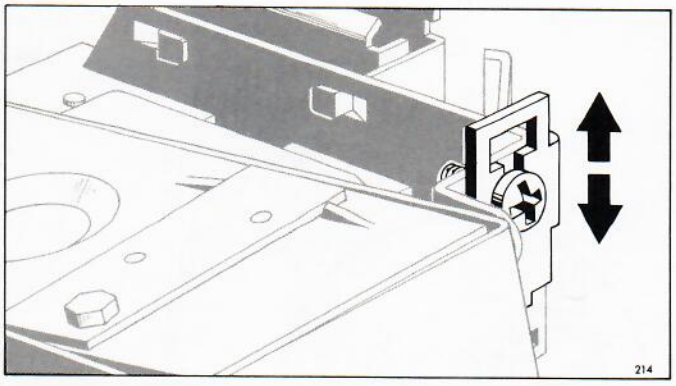

FIGURE 31 -- ADJUSTMENT OF VERTICAL POSITION

Loosen Phillips head screw and move bracket up or down to correct.

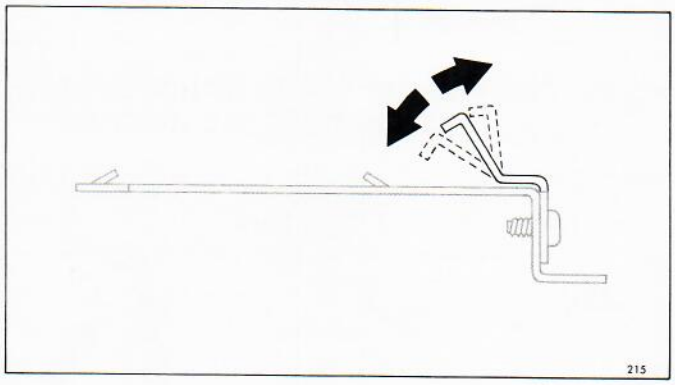

FIGURE 32 -- ADJUSTMENT OF HORIZONTAL POSITION

Form bracket as shown to correct.

NOTE: This is the same bracket as in Figure 31.

Compliments of:
www.KodakParts.com

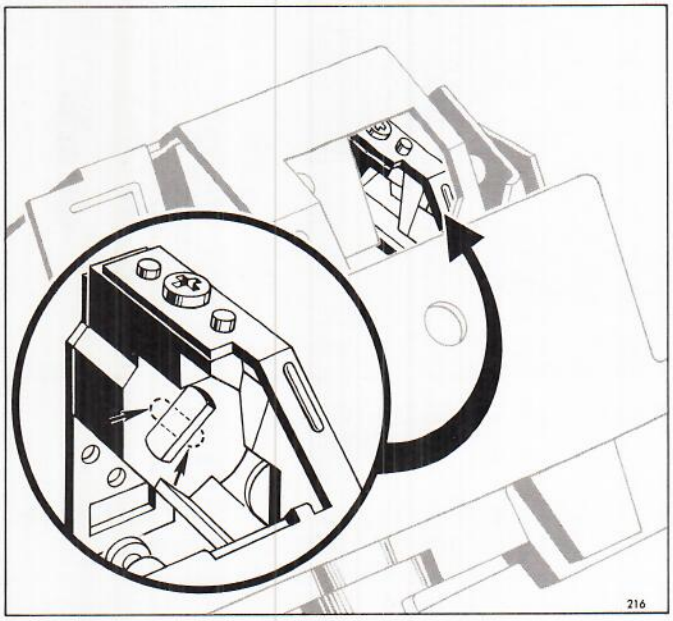

FIGURE 33 -- PROPER DISTRIBUTION OF LIGHT ACROSS PHOTOCELL APERTURE

Light should appear on both sides of the photocell aperture.

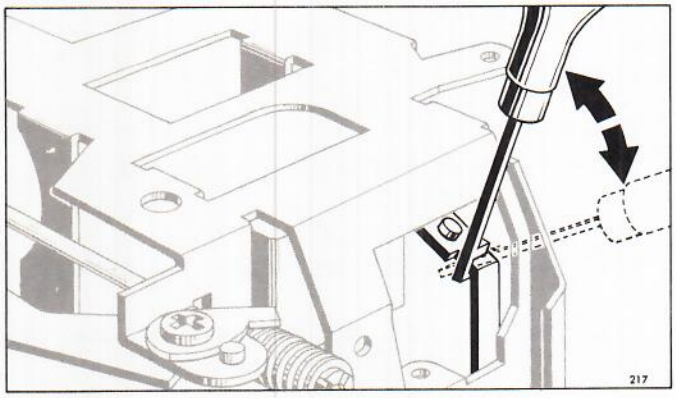

FIGURE 34 -- LIGHT IMAGE

If light image does not appear on both sides of the photocell aperture as shown in Figure 33, form bracket to correct with #TL1828.

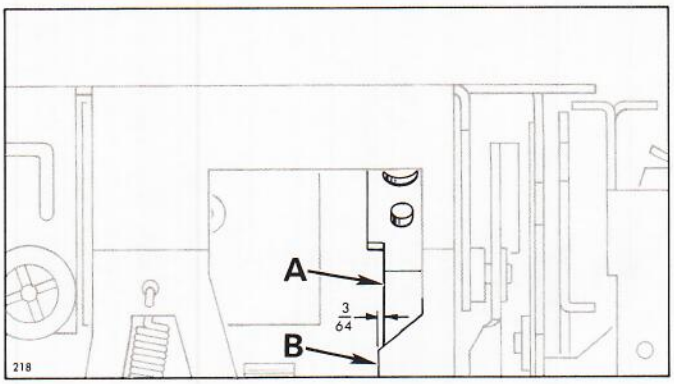

FIGURE 35 -- AUTO-FOCUS MAXIMIMUM BACKWARD POSITION

Photocell bracket surface A should be approximately 3/64 of an inch behind surface B.

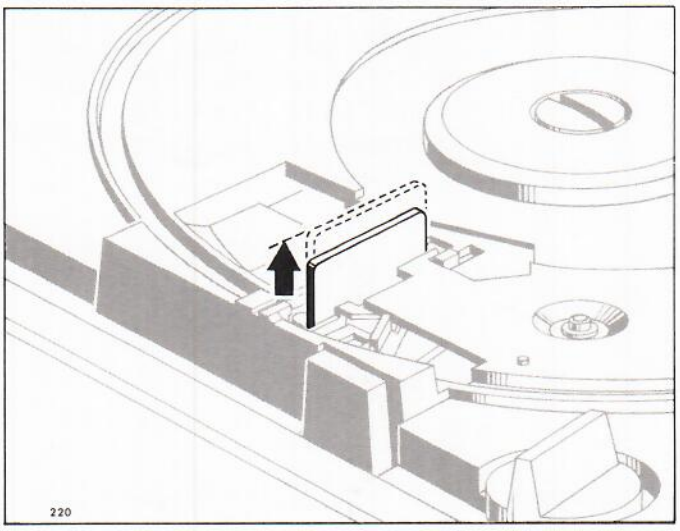

FIGURE 36 -- AUTO-FOCUS MAXIMUM FORWARD POSITION

When auto-focus gauge #TL1808 is raised slightly the auto-focus system should drive the photocell assembly to its maximum position forward and stop.

Compliments of:
www.KodakParts.com

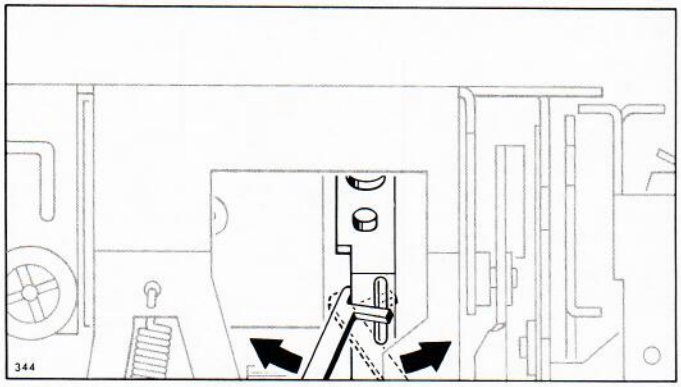

FIGURE 37 -- AUTO-FOCUS RANGE ADJUSTMENT

Form photocell bracket with #TL1828 or equivalent. If you form the photocell bracket towards the front of the projector, the auto-focus system drives further in the same direction and vice-versa.

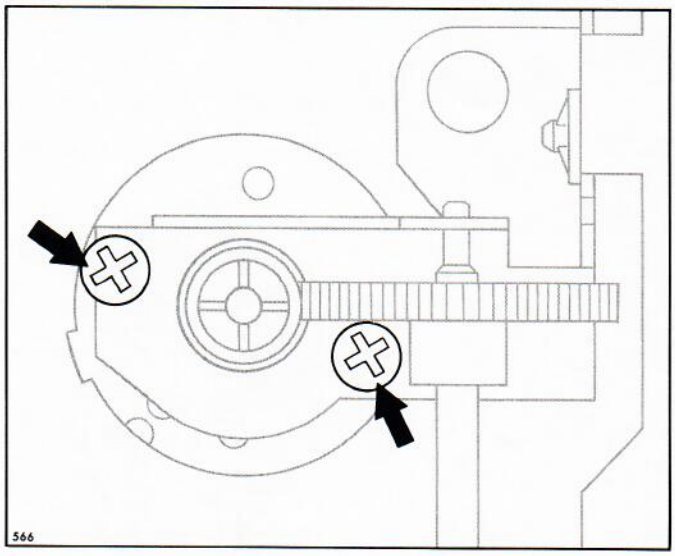

FIGURE 38 -- FOCUS MOTOR REMOVAL

Remove screws.

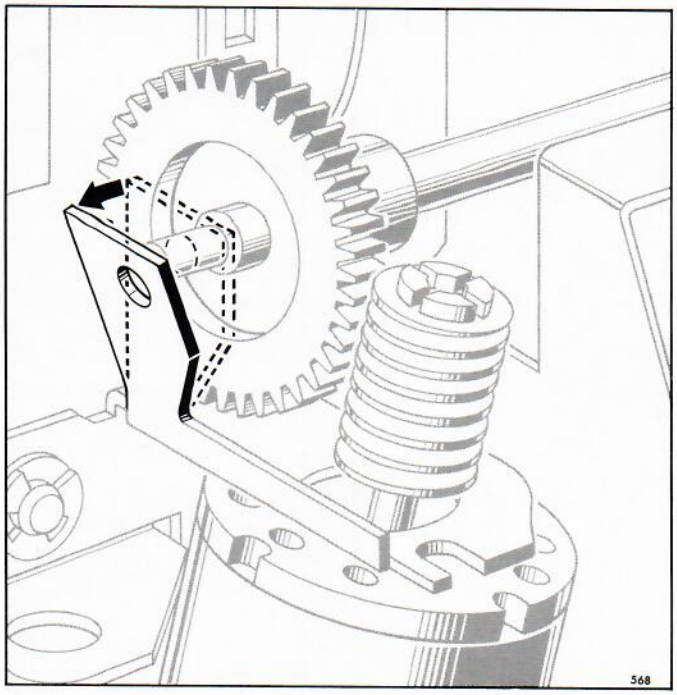

FIGURE 39 -- FOCUS MOTOR REMOVAL

Disengage focus worm shaft.

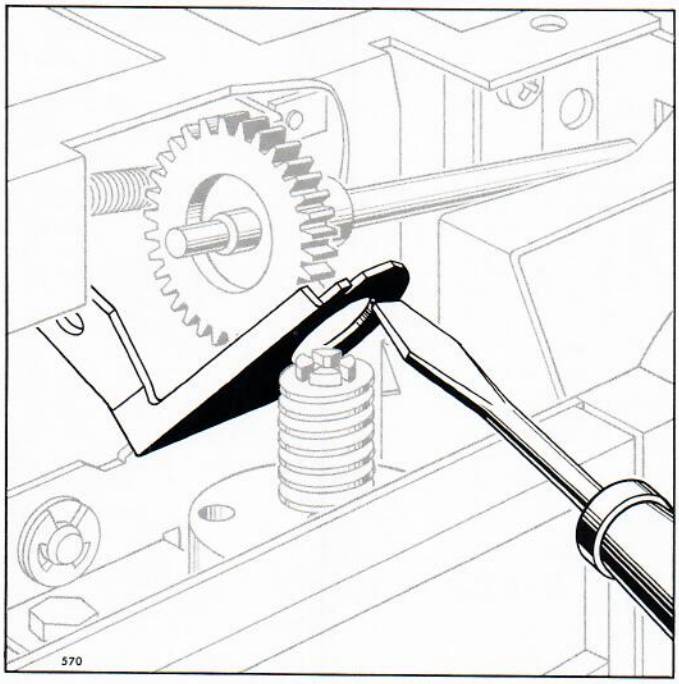

FIGURE 40 -- FOCUS MOTOR REMOVAL

Form bracket up sufficiently to remove focus motor from housing.

Reassemble in reverse order. Be sure bracket is reformed to its original position to give proper engagement of worm and worm gear.

Compliments of:
www.KodakParts.com

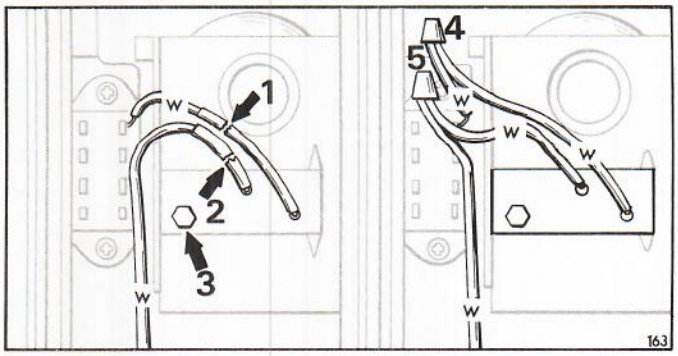

FIGURE 41 -- THERMAL FUSE REPLACEMENT

Cut leads as shown at Numerals 1 and 2; remove screw, Numeral 3. Strip leads. Insert new thermal fuse and wire connect as shown at Numerals 4 and 5. Replace screw.

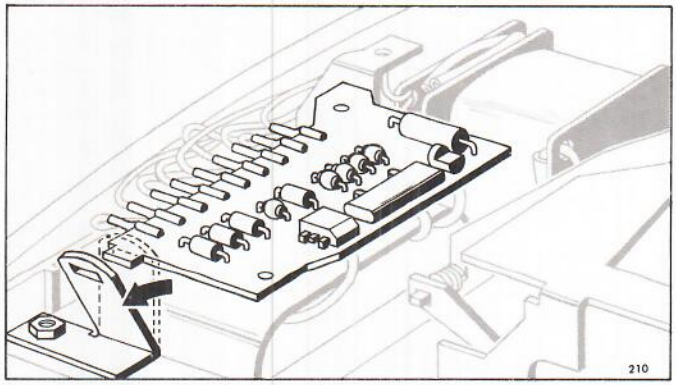

FIGURE 42 -- AUTO-FOCUS SYSTEM CIRCUIT BOARD

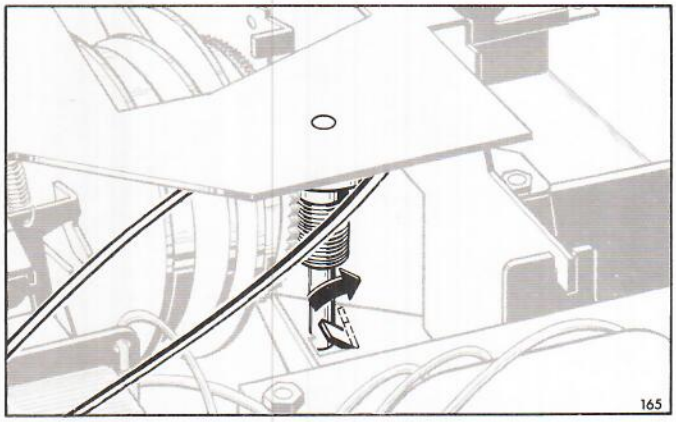

FIGURE 43 -- WORM PULLEY AND BELT

Form tab away from shaft. (Perform the forming slowly to prevent the tab from breaking off.)

Lubrication: Place small amount of lubricant (part No. 763002) on pulley shaft and on worm teeth.

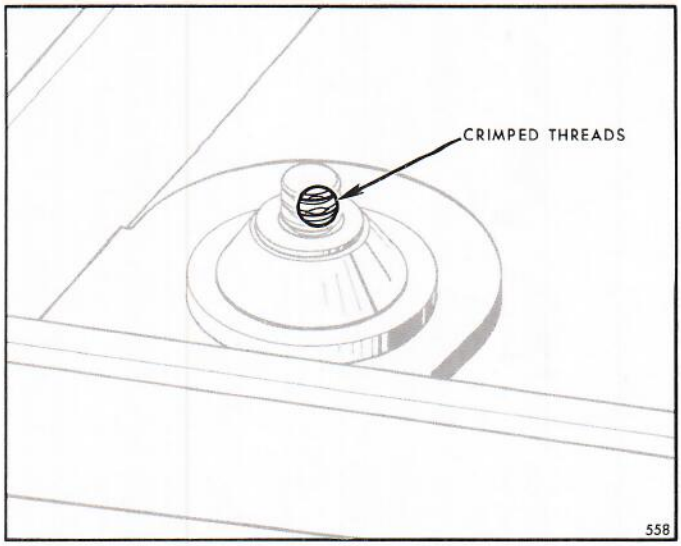

FIGURE 44 -- LEVELING KNOB ASSEMBLY

File crimped teeth on screw for removal.

Crimp teeth of new screw after threading through base plate nut.

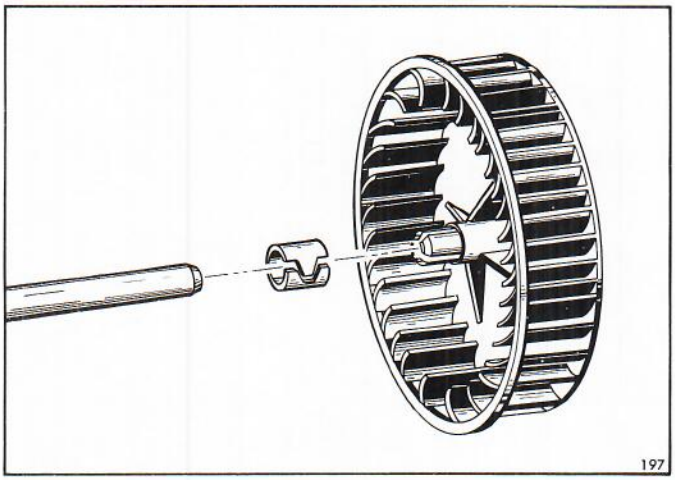

FIGURE 45 -- MOTOR FAN SHAFT AND FAN

Fan is normally cemented to shaft. Upon replacing fan, put compression ring on fan fingers, apply cement (part No. G135) to fan-cavity and press fan onto shaft. Be sure fan is fully seated on shaft. Allow cement to dry before operating motor.

Compliments of:
www.KodakParts.com

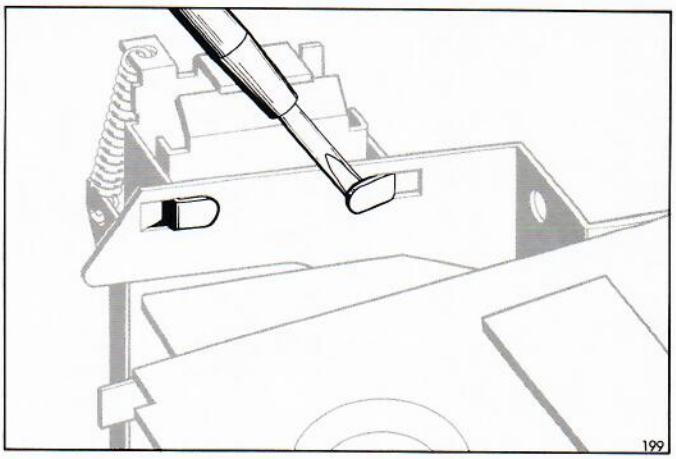

FIGURE 46 -- GATE ASSEMBLY (BOTTOM)

Be sure tabs draw gate assembly tight against lamphouse.

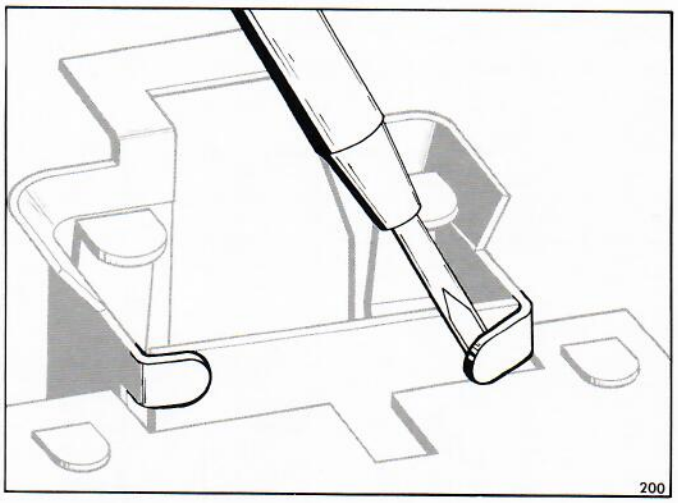

FIGURE 47 -- GATE ASSEMBLY (TOP)

Be sure tabs draw gate assembly tight against lamphouse.

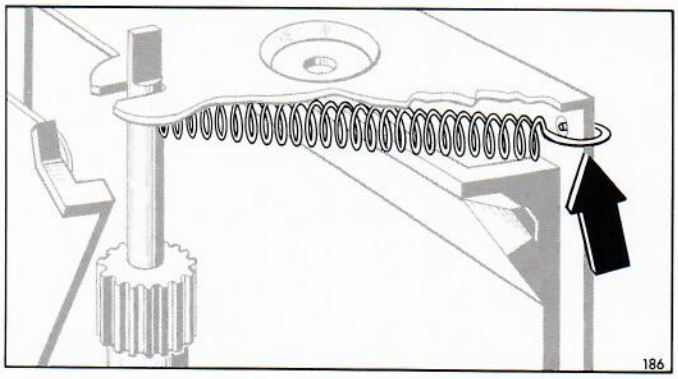

FIGURE 48 -- FOCUS SHAFT ASSEMBLY

Lubrication: Apply a thin coat of lubricant (part No. 763003) on shaft at spring slot and plate slot.

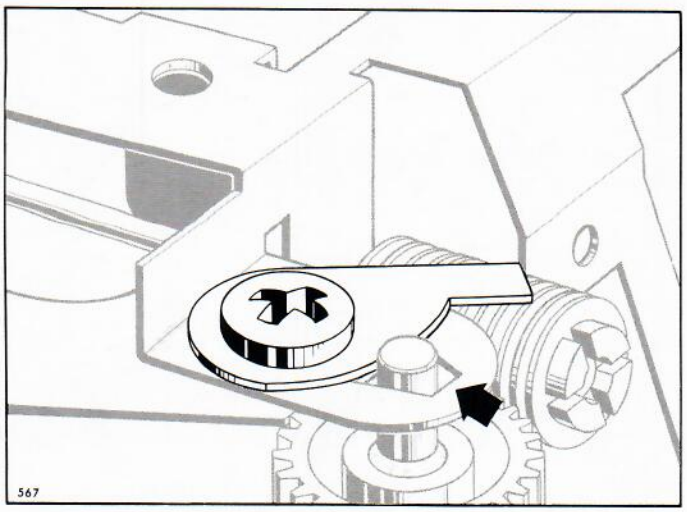

FIGURE 49 -- FOCUS SHAFT CAM

Reassembly: Cam should hold focus shaft against outer edge of bracket opening.

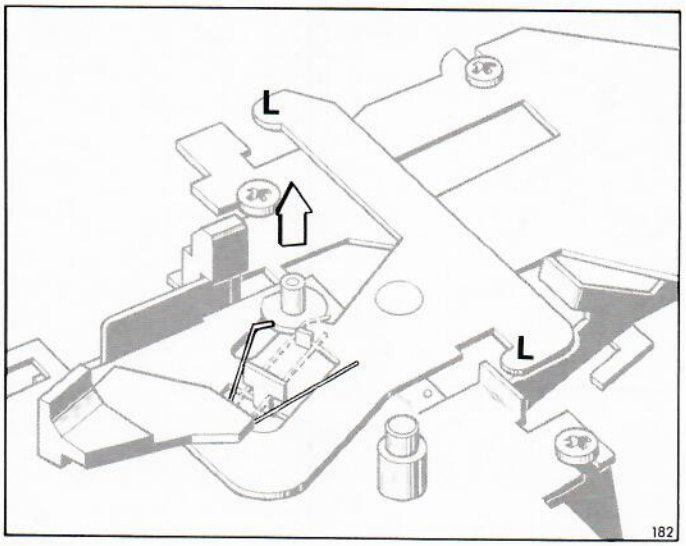

FIGURE 50 -- INDEXER

Spread spring and lift off.
Lubrication: Apply a thin coat of lubricant (part No. 763003) on the underside of two tabs labeled "L".

Compliments of:
www.KodakParts.com

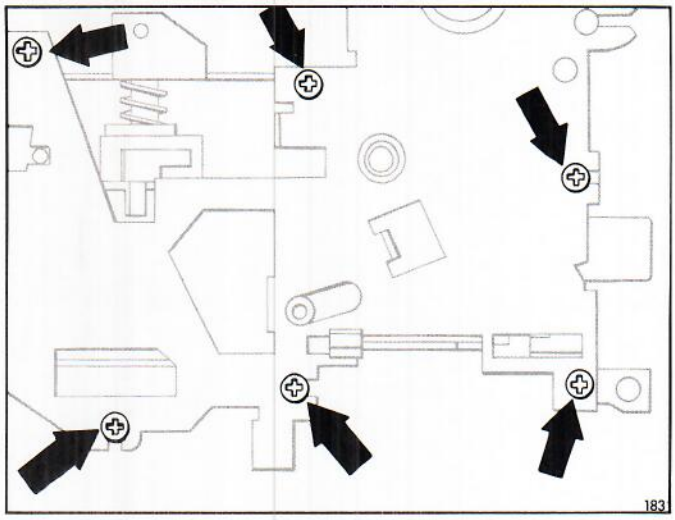

FIGURE 51 -- TOP PLATE

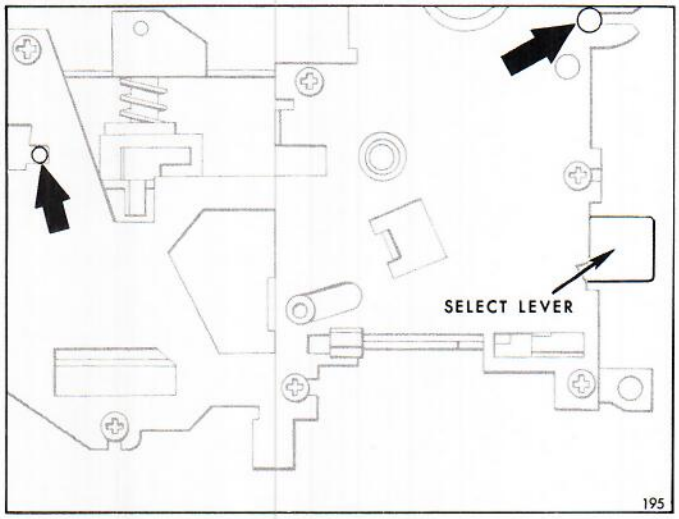

FIGURE 52 -- FOCUS SHAFT, WORM PULLEY SHAFT, AND SELECT LEVER

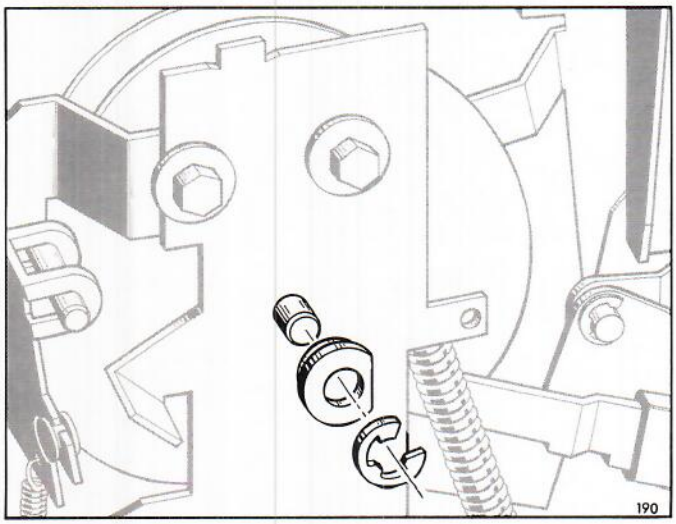

FIGURE 53 -- CAM STACK REMOVAL

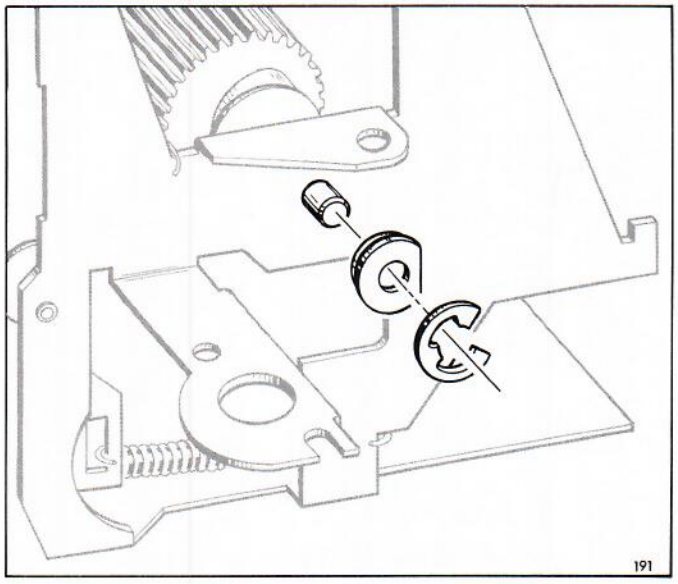

FIGURE 54 -- CAM STACK REMOVAL

Spread mechanism frame slide and lift out cam stack assembly.

NOTE: Refer to Theory of Operation for lever location on cams.

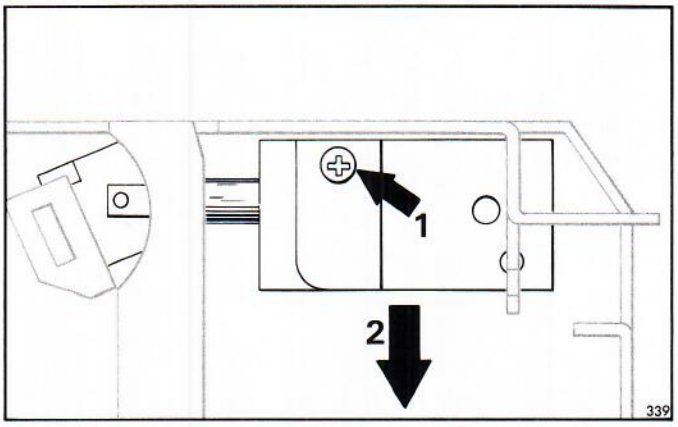

FIGURE 55 -- SOLENOID REMOVAL

With cam stack removed, solenoid is readily removed.

Compliments of:
www.KodakParts.com

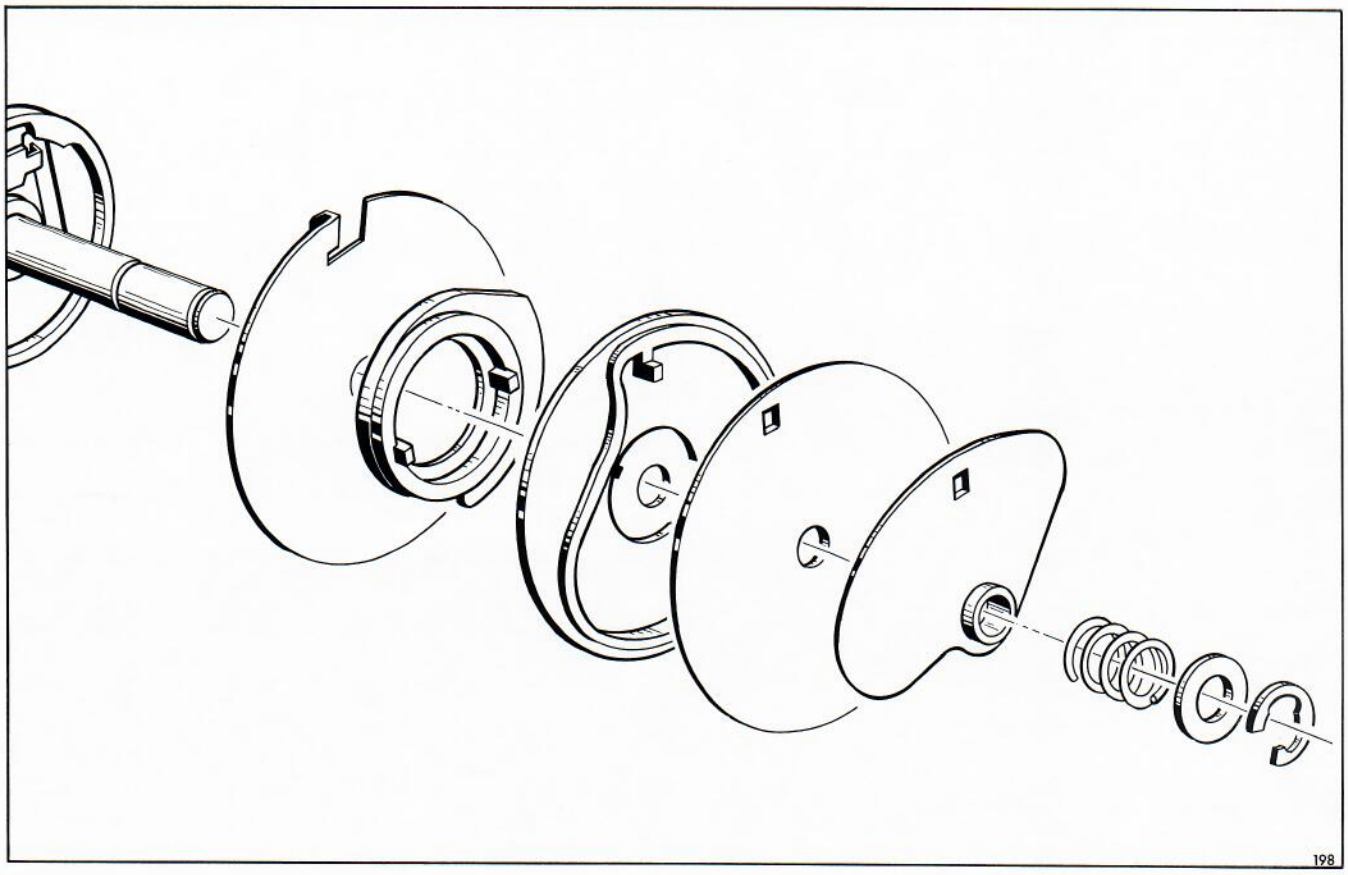

FIGURE 56 -- CAM STACK ASSEMBLY (CAM SIDE)

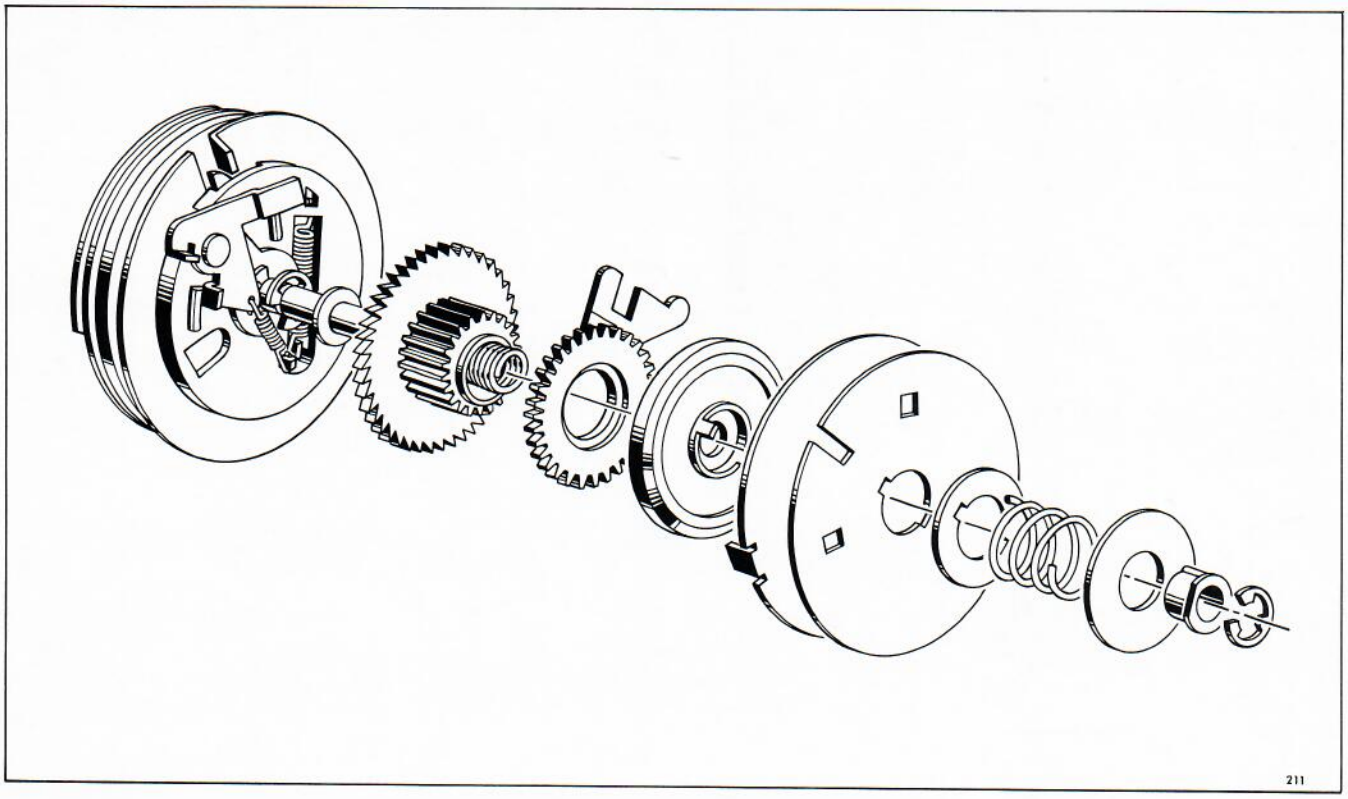

FIGURE 57 -- CAM STACK ASSEMBLY (DRIVE SIDE)

Compliments of:
www.KodakParts.com

CHART OF DISASSEMBLY OF HOUSING SYSTEM

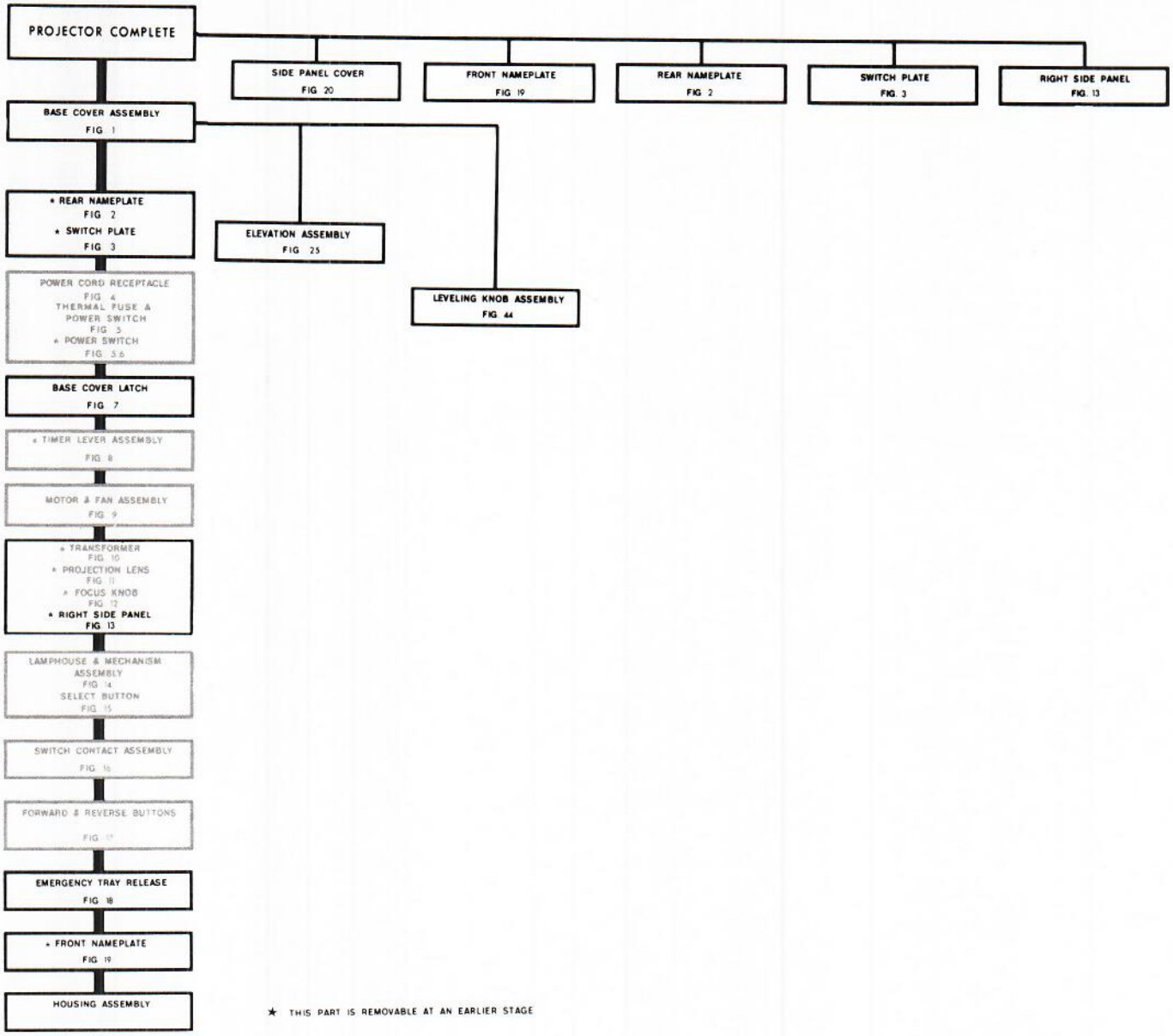

★ THIS PART IS REMOVABLE AT AN EARLIER STAGE

Compliments of:
www.KodakParts.com

SPECIFICATIONS

Power Switch -- OFF; shut off projector completely.
FAN; turn on motor with fan.
LAMP; turn on motor with fan and lamp.

Slide "Popping" -- Slides should not "pop" in or out of focus during normal projection. If slides are changed very rapidly or shown separately, without tray, "popping" may occur because the slides have not been conditioned sufficiently.

Vibration -- Projector should be free of vibration which affects the projected image when viewed at a distance of 2 1/2 screen widths.

Cords -- Power cord and remote control cord should have no broken wires or cracked insulation.

Motor -- Minimum motor speed should be 3000 rpm. Check only on complaint of motor speed or ventilation problems.

Dielectric Test -- Projector must withstand electrical insulation test. Leakage current must not exceed 4.0 mA with 900V, 60 Hz, applied for one minute between the shorted prongs of the power plug and the frame, with the power switch in the lamp position.

The use of Tool #TL1513 performs the electrical insulation test. "Breakage" and "Leakage" lamps should not light.

TESTS AND CHECKS

WARNING: DANGEROUS VOLTAGE Use caution to make the following checks:

If, when the power switch is turned on, the motor does not operate, check all components in the power and cooling system for continuity or voltage.

Cord plug -- check voltage across prongs inside projector (110-125V).
Thermal fuse -- check continuity between violet lead at switch and violet lead at power cord receptacle. (Power off.)
Switch and motor -- check voltage at white and brown leads at wire connectors (110-125V).

[For voltage checkpoints, see Electrical Diagram and Test Point Sheet (pages 52 and 54).]

Compliments of:
www.KodakParts.com

POWER AND COOLING SYSTEM

DESCRIPTION

The power and cooling system consists of the motor and fan, power switch, thermal fuse, cord and receptacle. A drive belt supplies mechanical power to the slide transport system and the transformer supplies electrical power to the illumination system. Taps on the main motor supply low voltage to the cycle solenoid and the auto-focus system.

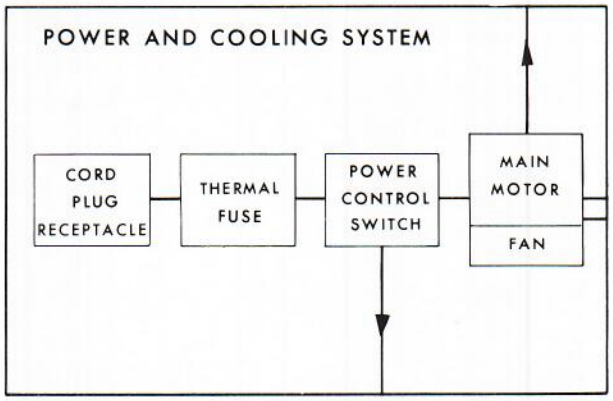

THEORY OF OPERATION

When the switch is moved from the OFF position to the FAN position, the motor runs and the fan draws air through various openings in the projector and exhausts this air through the pre-heater duct and the opening in the rear of the projector. When the motor is operating, mechanical power is continuously supplied by the drive belt to the slide transport system. Low voltage is also available to operate the cycle solenoid and the auto-focus system. When the switch is moved from FAN to LAMP, the power is now supplied to the lamp transformer.

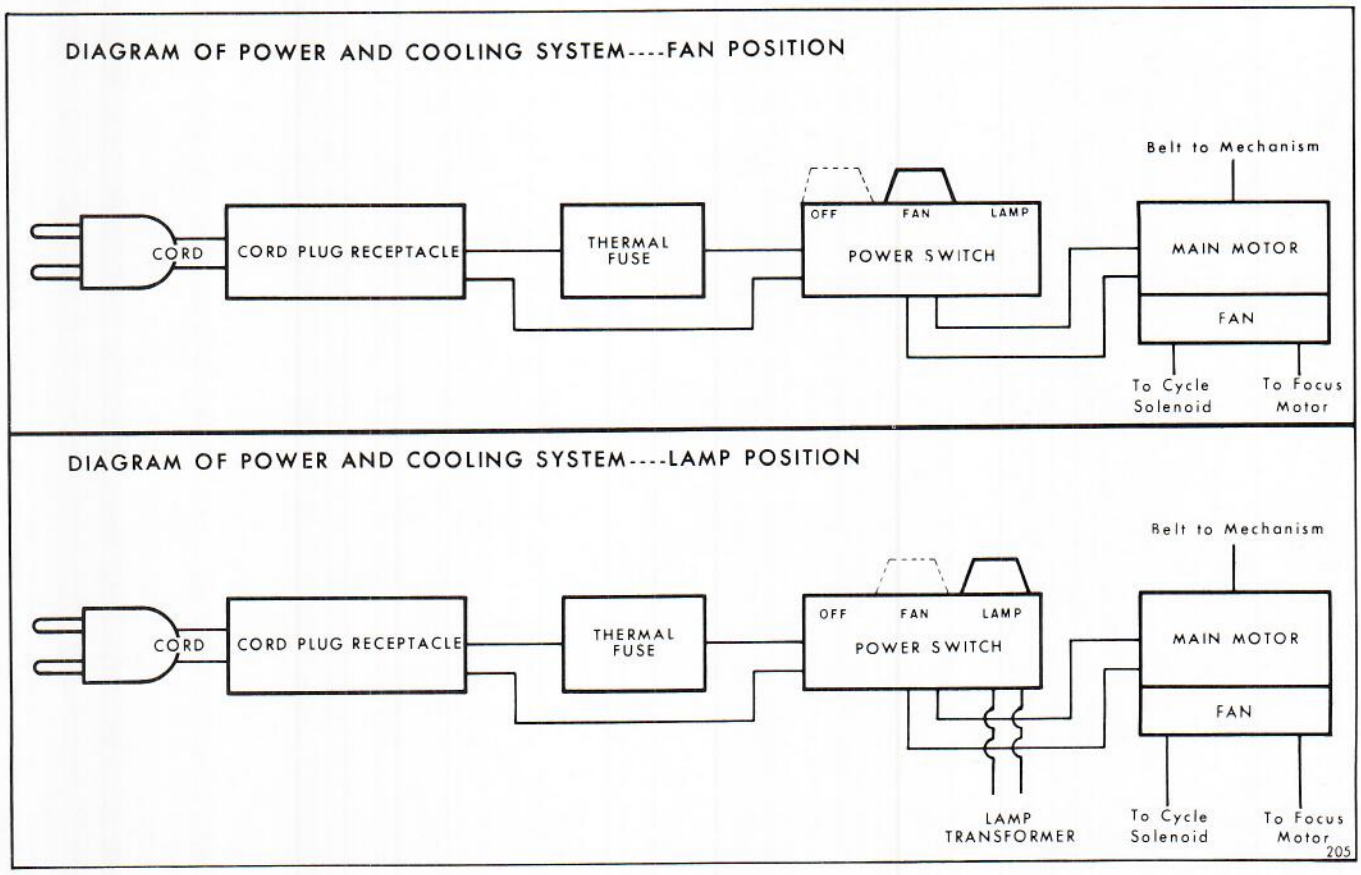

Compliments of:
www.KodakParts.com

CHART OF DISASSEMBLY OF POWER AND COOLING SYSTEM

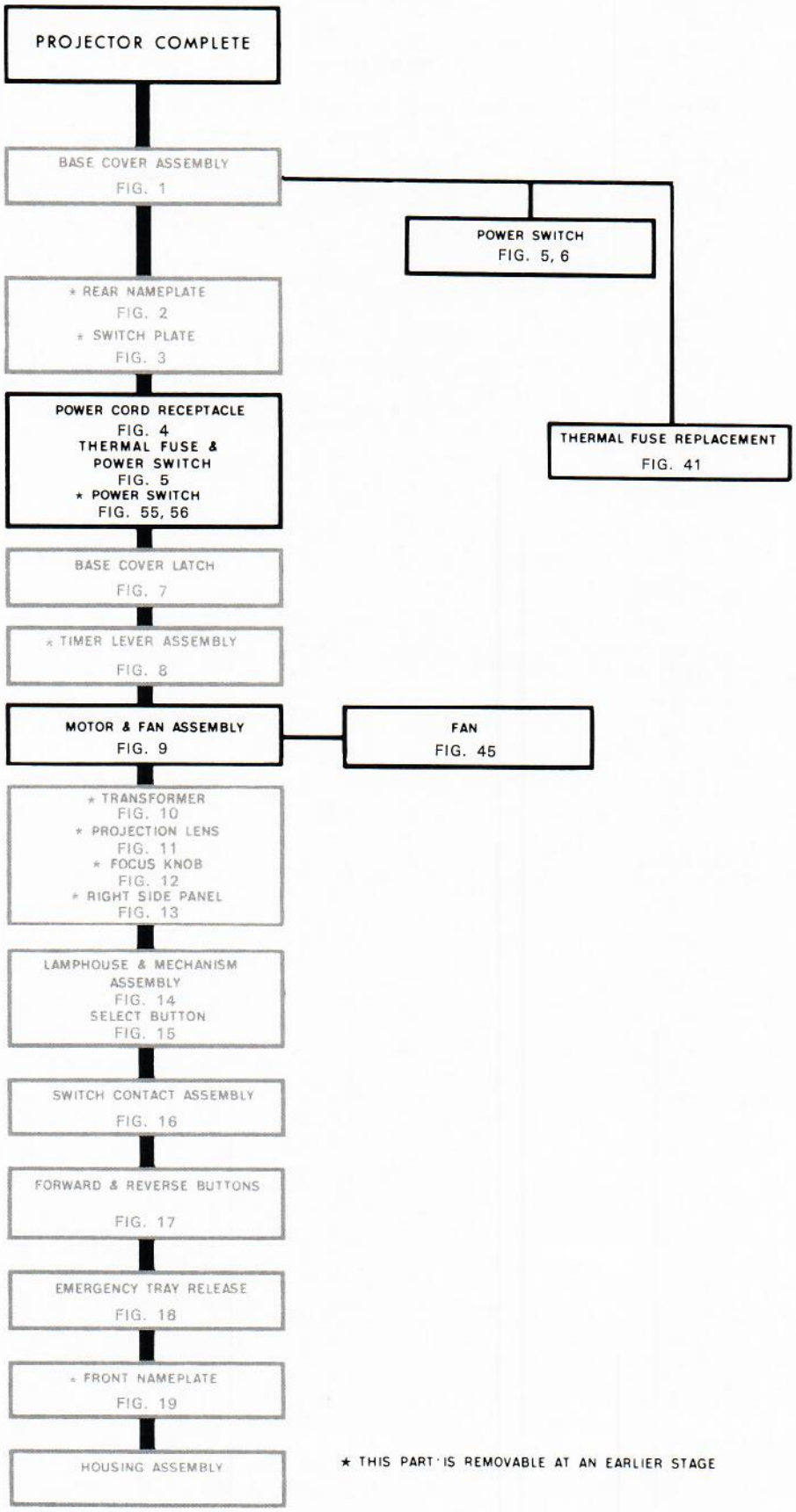

★ THIS PART IS REMOVABLE AT AN EARLIER STAGE

Compliments of:
www.KodakParts.com

Compliments of:
www.KodakParts.com

ILLUMINATION SYSTEM

DESCRIPTION

The illumination system consists of the step-down transformer, the projection lamp, and the condenser lens assembly. Reduced voltage (24V ac) is supplied to the lamp through the step-down transformer. The lamp supplies the light through the condensers to illuminate the slide for projection and also to the auto-focus system.

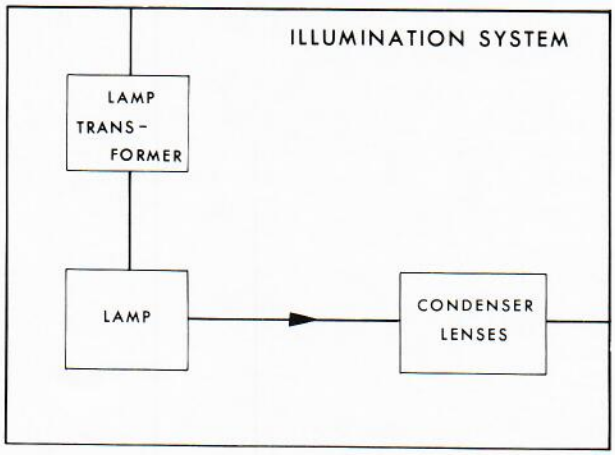

SPECIFICATIONS

Lamp Ejector - Ejector should push used lamp out of socket so lamp can be easily removed with fingers. Lamp ejector should not interfere with seating of replacement lamp.

Condenser Mount - Optical system components (projection lens, condenser lens, heat-absorbing glass condenser lens) should be secure, clean, and free of chips or cracks which may affect screen illumination.

Lamp - Burn-out of lamp before or during repair; should be replaced with a new lamp of same ANSI designation.

Dielectric Test - Projector must withstand electrical insulation test. Leakage current must not exceed 4.0 mA with 900V, 60 Hz, applied for one minute between the shorted prongs of the power plug and the frame, with the power switch in the lamp position.

The use of Tool #TL1513 performs the electrical insulation test. "Breakdown" and "Leakage" lamps should not light.

TESTS AND CHECKS

WARNING: DANGEROUS VOLTAGE Use caution to make the following checks:

Lamp Transformer Input -- 110-125V ac at black and white leads at wire connectors

Lamp Transformer Output -- at lamp socket connections 24V ± 1V with 120V input.

Compliments of:
www.KodakParts.com

[For voltage checkpoints, see Electrical Diagram and Test Point Sheet pages 52 and 54).]

Condenser Lenses -- check for broken, cracked, or missing lens(es).

Compliments of:
www.KodakParts.com

CHART OF DISASSEMBLY OF ILLUMINATION SYSTEM

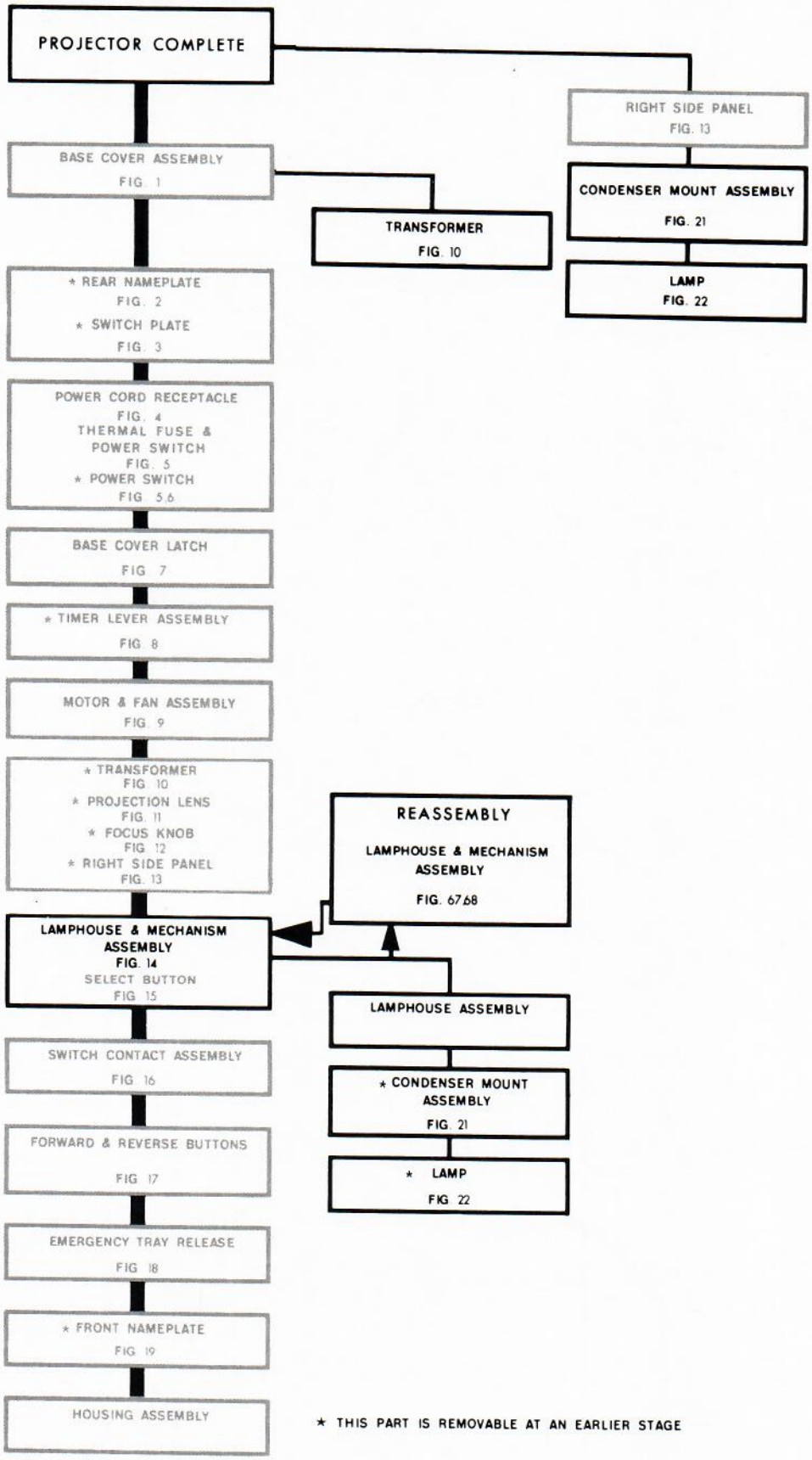

* THIS PART IS REMOVABLE AT AN EARLIER STAGE

Compliments of:
www.KodakParts.com

Compliments of:
www.KodakParts.com

PROJECTION SYSTEM

DESCRIPTION

The projection system consists of the focus knob, focus shaft assembly, focus worm shaft assembly, focus motor, auto-focus assembly, and projection lens.

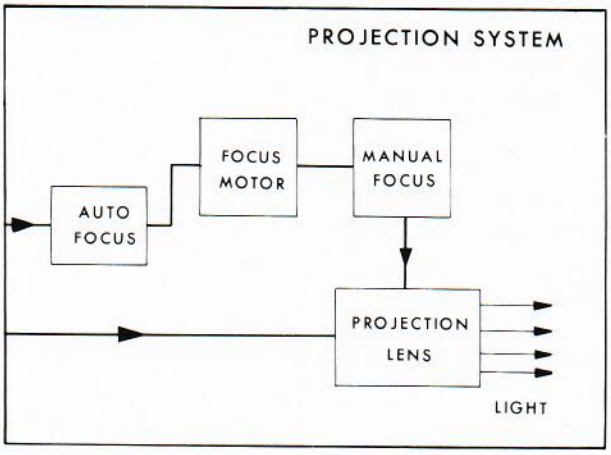

THEORY OF OPERATION

Auto-focus -- Once the projection lens has been carefully focused to project a sharp image of the first slide, subsequent slides are automatically maintained in good focus by the auto-focus system. It accomplishes its function by detecting changes in position of the film and moving the projection lens to compensate for this change.

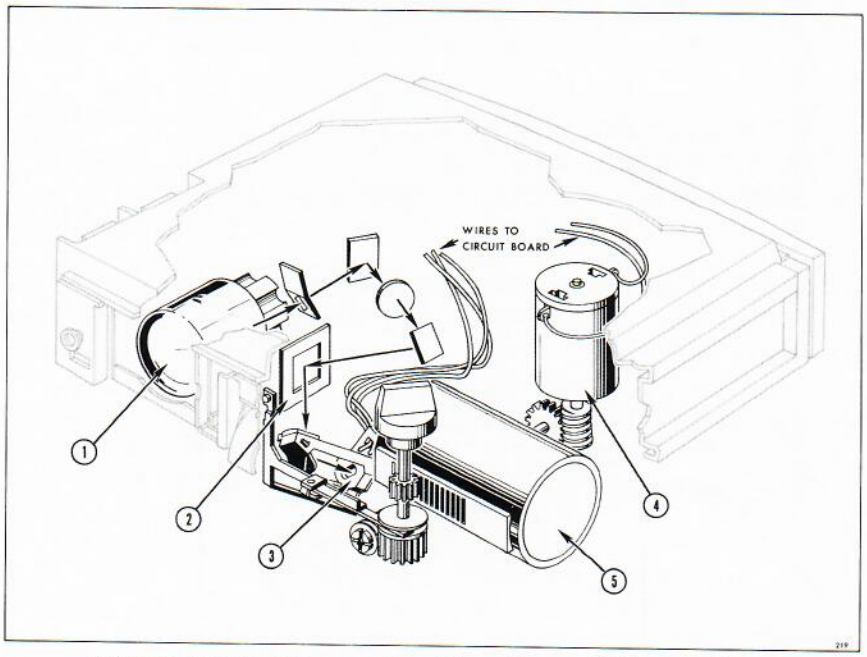

Light from the projection lamp (1) is directed onto the center of the slide (2) in the gate through a series of reflectors and lenses. The reflection of this beam strikes the photocell (3) which is wired to the circuit board. The circuit board controls the focus motor (4) which drives the projection lens (5) to maintain sharp focus.

Compliments of:
www.KodakParts.com

The illustration shows how the photocell detects changes in the slide position. After we have manually focused our first slide the light from the projection lamp is striking the photocell's area B. This is the null area in which no signal is sent to the circuit board. Therefore, the focus motor does not run and the projection lens remains stationary.

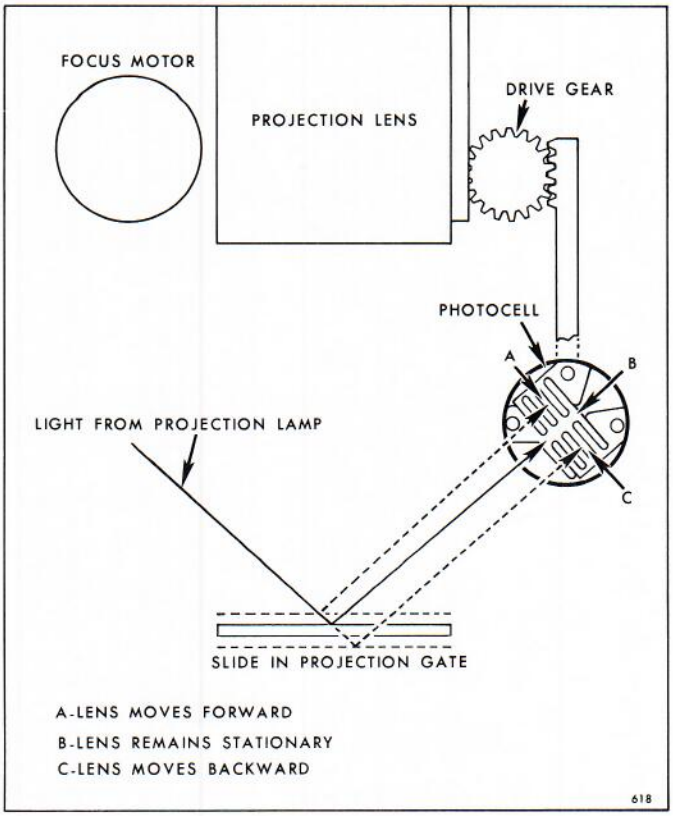

If the subsequent slide is forward from the initial position, the beam of light strikes area A of the photocell. The circuit board receives a signal which turns on the focus motor and through the drive gear moves the projection lens forward. Notice that the photocell is also driven by the drive gear and so as it moves forward, the light beam moves from area A to area B of the photocell turning off the focus motor. The same thing happens if subsequent slide's position was behind the initial slide's position except that: When the beam strikes area C of the photocell, the circuit board changes the voltage polarity across the focus motor so it can drive the projection lens backward.

SPECIFICATIONS

Focus Knob -- Focus knob should move projection lens smoothly throughout its maximum travel. Moving focus knob towards the right edge of projector should disengage gear drive of projection lens so lens may be removed or pushed in all the way for storage.

Auto-focus -- After the first slide has been focused on the screen, succeeding slides will be brought into focus provided they are not bowed more than ± .025-inch.

Projection Lens -- Front and rear exterior lens surfaces should be free of all foreign matter. Lens should project an acceptable image; if it does not, a separate lens repair is indicated.

Dielectric Test -- Projector must withstand electrical insulation test. Leakage current must not exceed 4.0 mA with 900V, 60 Hz, applied for one minute between the shorted prongs of the power plug and the frame, with the power switch in the lamp position.

The use of Tool #TL1513 performs the electrical insulation test. "Breakdown" and "Leakage" indicators should not light.

Focus -- Focus should be sharp and clear across entire image.

Compliments of:
www.KodakParts.com

TESTS AND CHECKS

Check focus using focus test slide (Tool #TL1827).

Procedure

Focus for best image on the right side series of circles. The left side series of circles should be of equal quality.

Focus top series of circles. Bottom series of circles should be of equal quality.

If the auto-focus system does not turn on, the following electrical checks can be made.

Power to the auto-focus circuit board from the main motor secondary windings.

Test Points 13 and 14 -- 30V ac ± 10%
Test Points 15 and 16 -- 28V ac ± 10%

Power to the focus motor.

Test Points 9 and 12 -- 28V ac ± 10%

[For voltage check points, see Electrical Diagram and Test Point Sheet (pages 52 and 54.)]

Compliments of:
www.KodakParts.com

CHART OF DISASSEMBLY OF PROJECTION SYSTEM

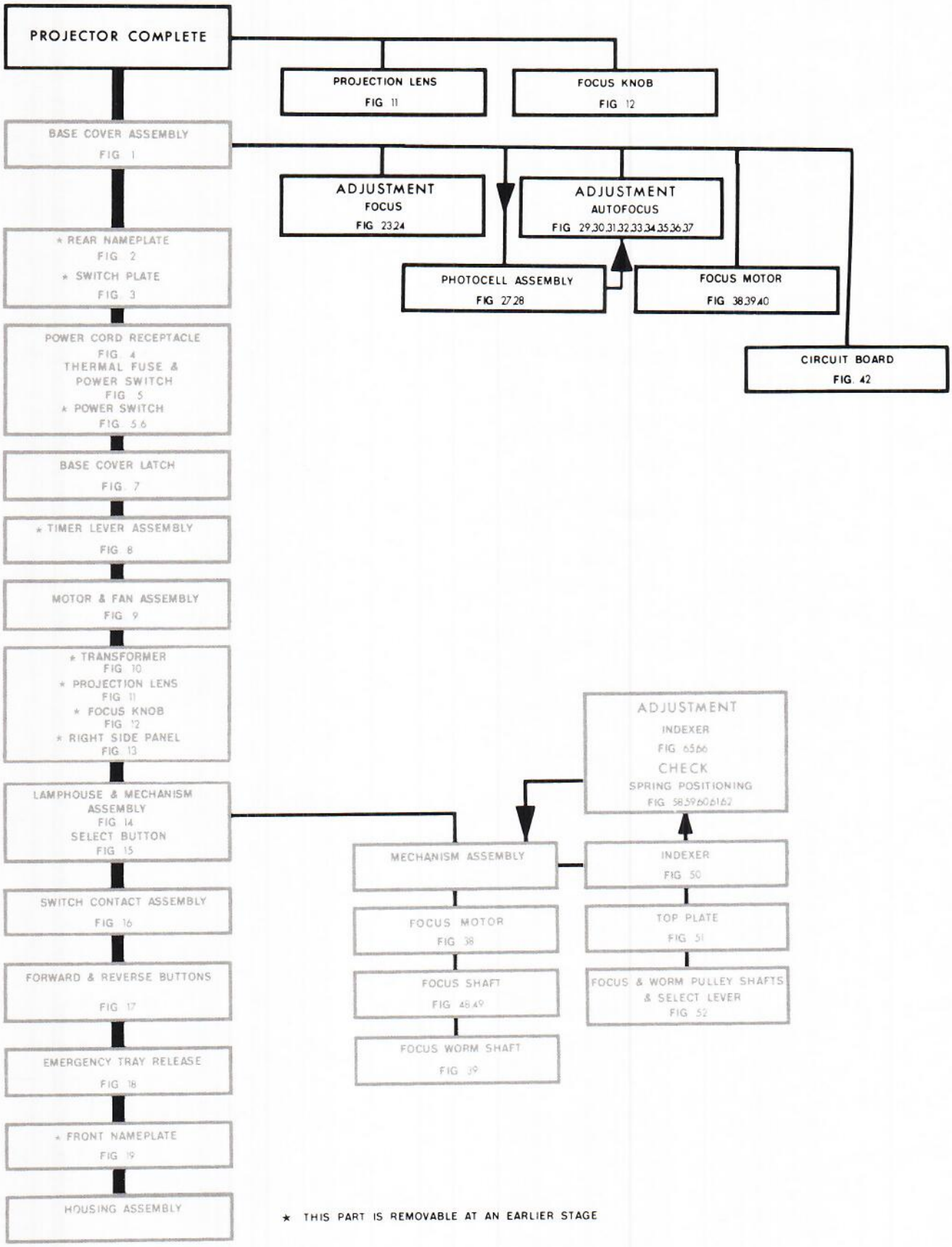

★ THIS PART IS REMOVABLE AT AN EARLIER STAGE

Compliments of:
www.KodakParts.com

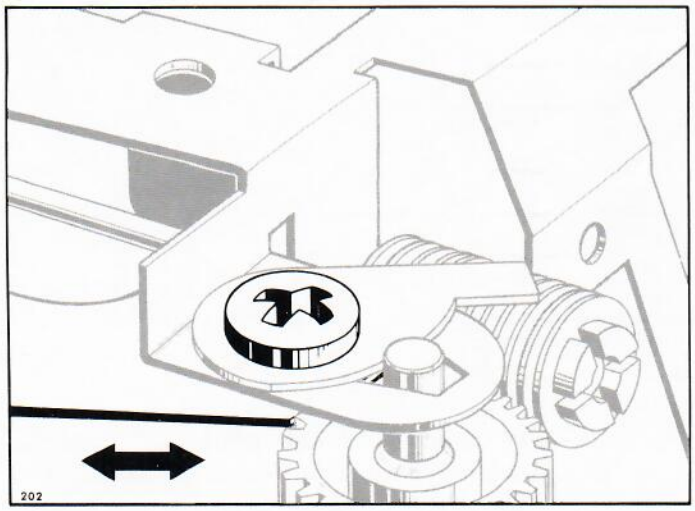

FOCUS (HORIZONTAL)

Loosen screw and move arm left or right. Tighten screw.

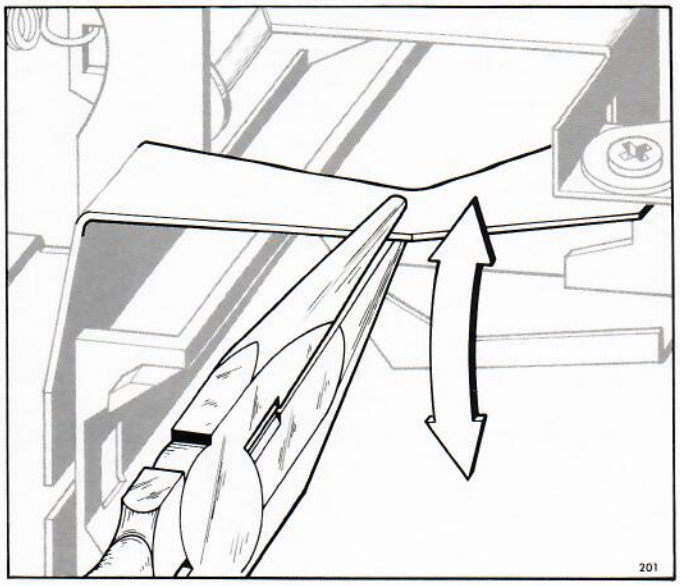

FOCUS (VERTICAL)

Form bracket arm up or down.

Tool #TL1808 is used to check: the maximum forward and backward position of the auto-focus system, and alignment of the light beam on the slide and photocell. The tool should remain fully inserted as shown in Step 1 except where noted.

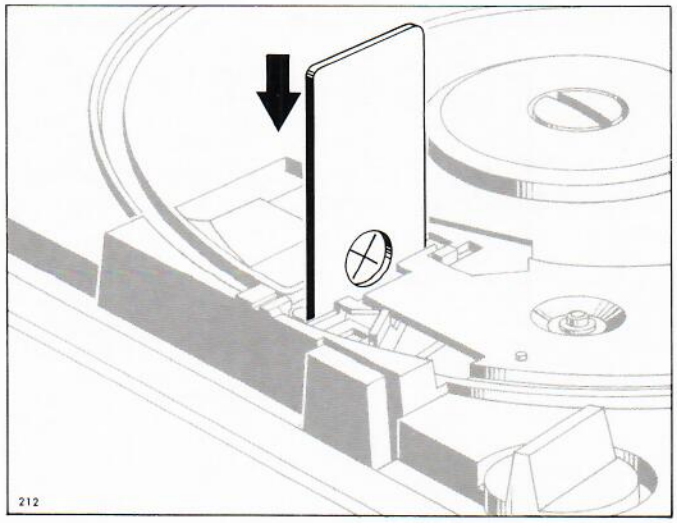

STEP 1 -- AUTO-FOCUS GAUGE, TOOL #TL1808

NOTE: Be sure tool is inserted as shown. This tool remains in this position for adjustments made in Steps 2 through 7.

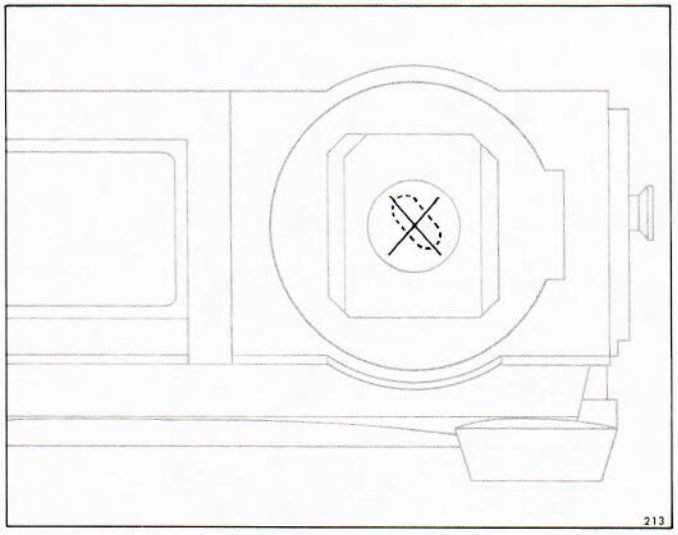

STEP 2 -- PROPER IMAGE POSITION

Light image should appear as shown on auto-focus gauge, Tool #TL1808.

Compliments of:
www.KodakParts.com

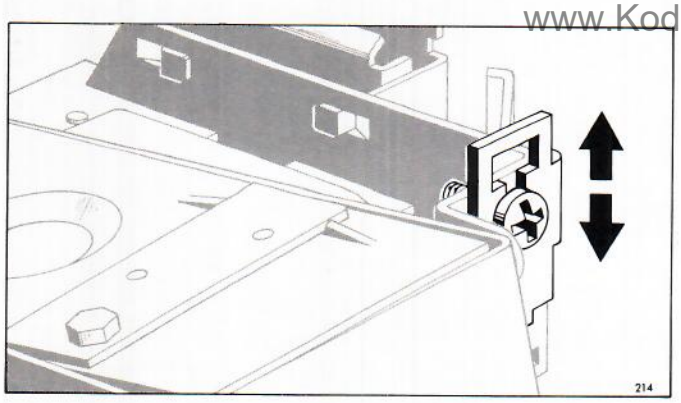

STEP 3 -- ADJUSTMENT OF VERTICAL POSITION

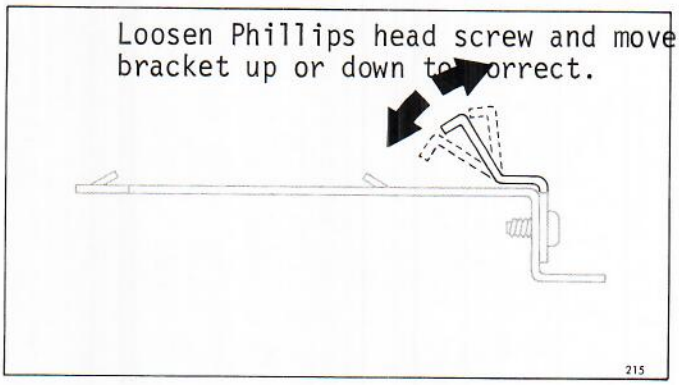

STEP 4 -- ADJUSTMENT OF HORIZONTAL POSITION

Form bracket as shown to correct.

NOTE: This is the same bracket as in Step 3.

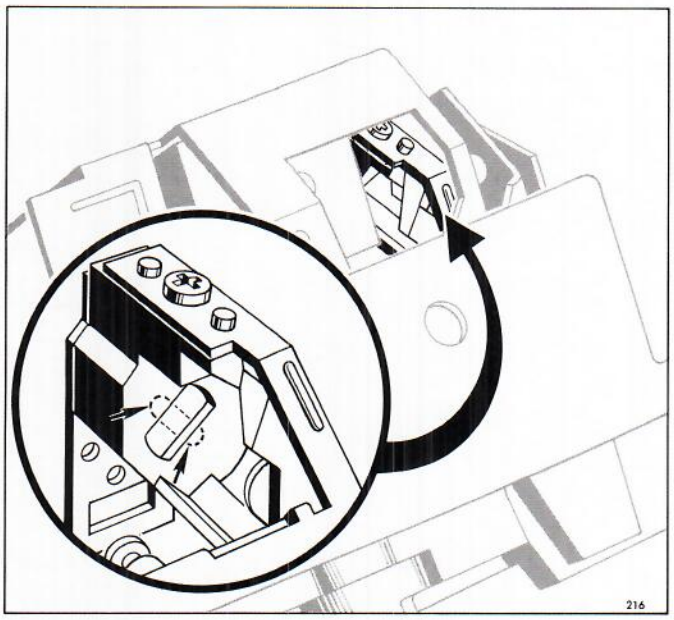

STEP 5 -- PROPER DISTRIBUTION OF LIGHT ACROSS PHOTOCELL APERTURE

Light should appear on both sides of the photocell aperture.

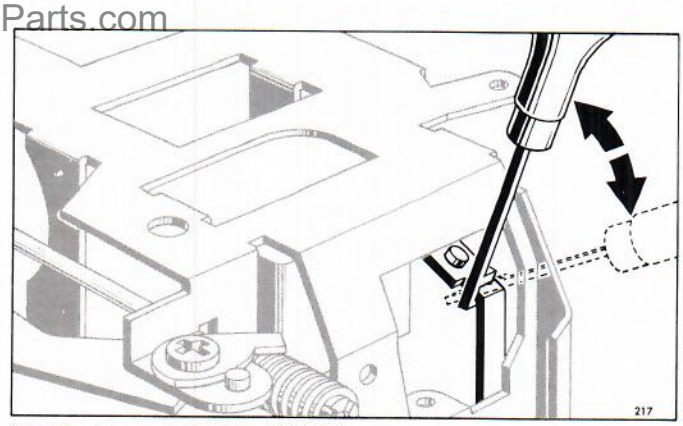

STEP 6 -- LIGHT IMAGE

If light image does not appear on both sides of the photocell aperture as shown in Step 5, form bracket to correct with Tool #TL1828.

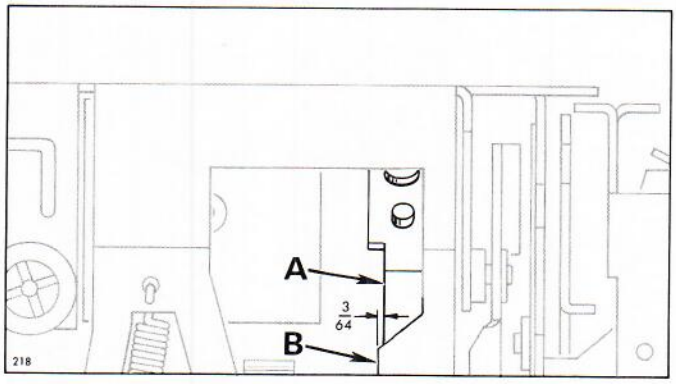

STEP 7 -- AUTO-FOCUS MAXIMUM BACKWARD POSITION

Photocell bracket surface A should be approximately 3/64-inch behind surface B.

Compliments of:
www.KodakParts.com

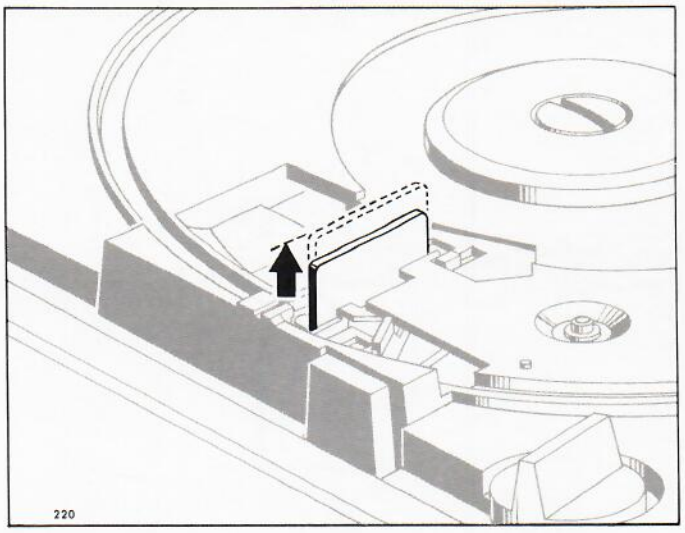

STEP 8 -- AUTO-FOCUS MAXIMUM FORWARD POSITION

When auto-focus gauge, Tool #TL1808 is raised slightly, the auto-focus gauge system should drive the photocell assembly to its maximum position forward and stop.

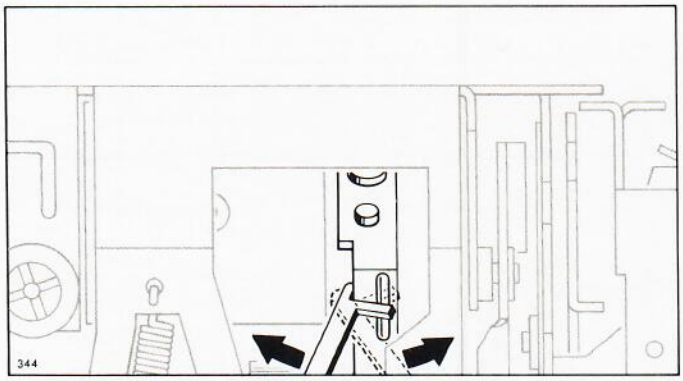

STEP 9 -- AUTO-FOCUS RANGE ADJUSTMENT

Form photocell bracket with Tool #TL1828 or equivalent. If you form the photocell bracket towards the front of the projector, the auto-focus system drives further in the same direction and vice-versa.

Compliments of:
www.KodakParts.com

Compliments of:
www.KodakParts.com

SLIDE TRANSPORT SYSTEM

DESCRIPTION

The slide transport system is the prime mechanical means by which the slides in the tray are projected, moved, and stored.

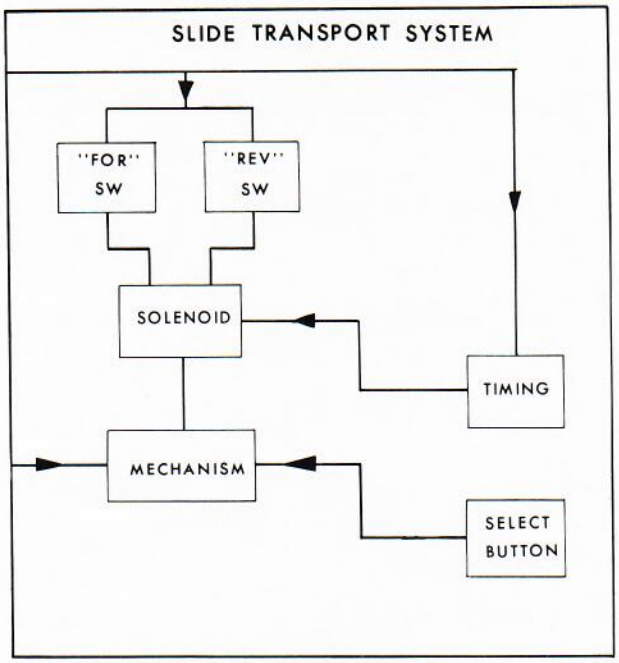

THEORY OF OPERATION

When the projector is plugged into the proper electrical outlet and turned on, the projector motor runs continuously, driving the worm pulley (1), and cam drive gear (5). The clutch on the cam stack is in the relaxed position [that is, the drive pawl (4) is held away from engagement with the cam drive gear (5) by the cycle lever (3) and no further action occurs at this time].

A cycle is started by momentarily pressing the forward button either on the projector or on the remote control cord. This actuates the cycle solenoid. The cycle solenoid pulls up the cycle lever (3) releasing the drive pawl (4) which moves into position to engage the drive gear (5) and the cam stack (6) starts to rotate. The cams actuate four levers; they are: the shutter and pressure pad lever (A), the slide lift lever (B), the locator lever (C), and the index lever (D). A retard lever (8) maintains pressure on the cam stack at the slide lift cam to retard the cam movement and prevent backlash or overtravel.

Lever (A) closes the shutter blades (7) and the pressure pads (not shown) open. The slide in the gate is lifted into tray be lever (B). Locator (9) moved by lever (C), disengages from the tray bosses and, the indexer (10) moved by lever (D) moves the tray forward one position. The locator (9) reengages the tray bosses to lock the tray in the next slide position over the gate; slide in the new position now drops into the gate, the pressure pads close and the shutter opens. The drive pawl (4) engages the cycle lever (3) contact and disengages from the drive gear (5). The cam stack stops rotating. This completes the 360-degree rotation of the cam stack cycle as shown.

Compliments of:
www.KodakParts.com

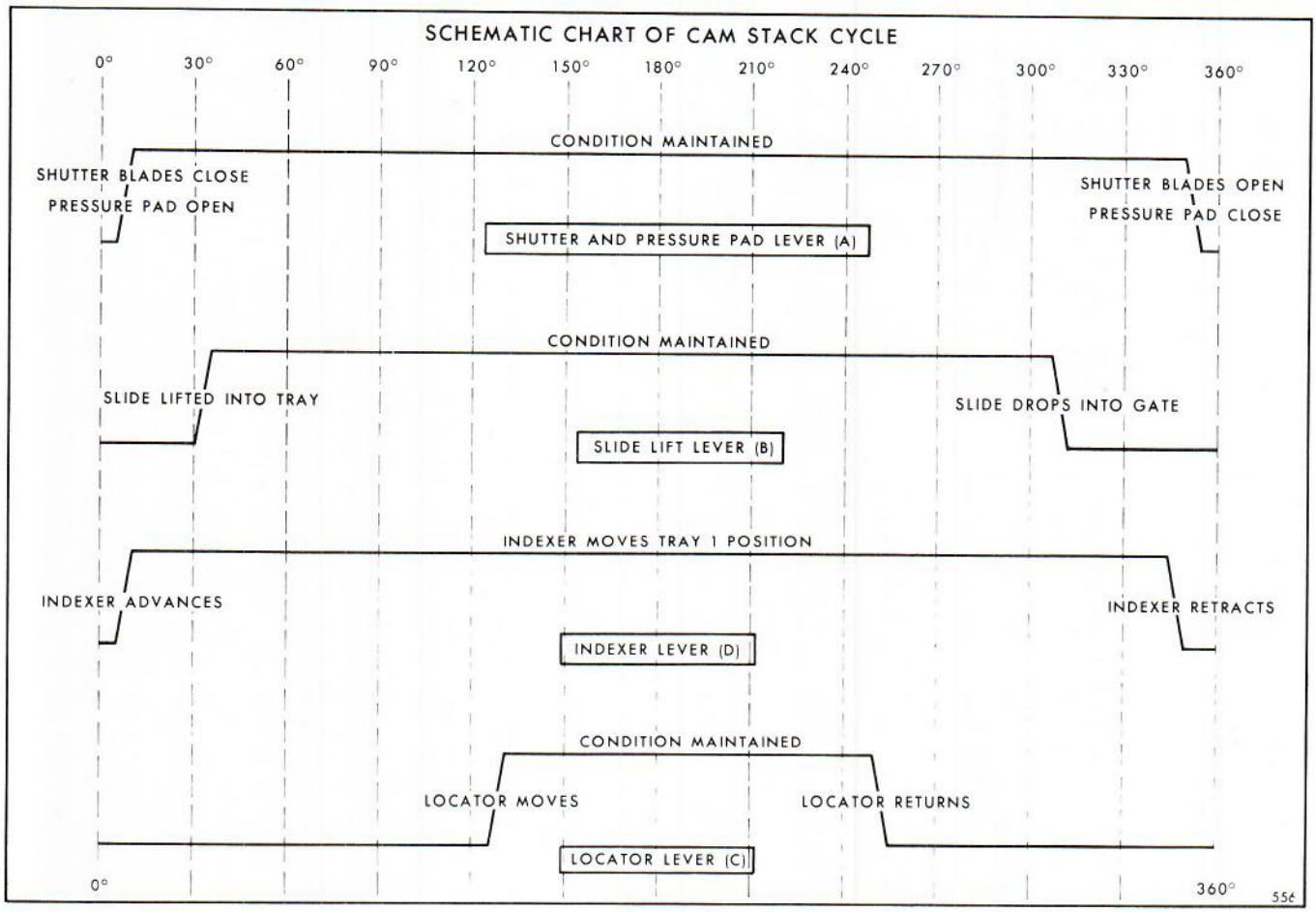

Reversing

Forward or reverse is determined by the position of direction lever. Normal or "at rest" position is forward operation.

When reverse button is pushed and held for a slightly longer time than required for forward operation, the cycle lever pivots "reverse" end of direction lever up for a long enough time to trap the index lever as it moves. The index lever then pivots in opposite (or reverse) direction from forward operation. Cycle solenoid is actuated for as long as reverse button is held.

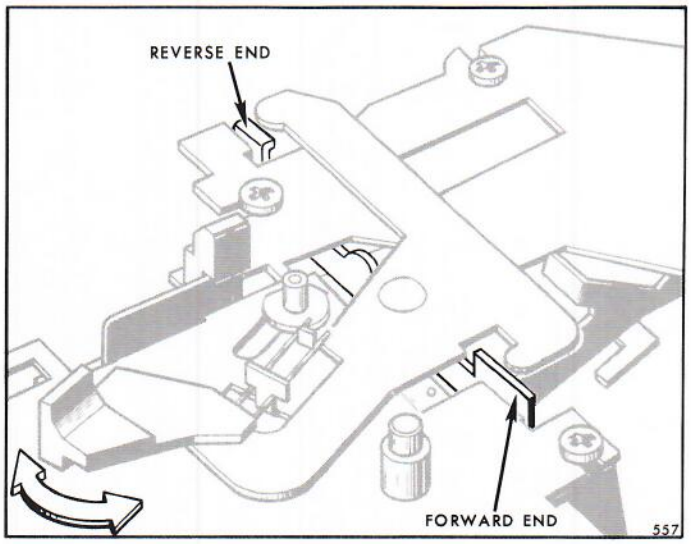

Compliments of:
www.KodakParts.com

Half Cycle

The purposes of half cycle or use of the "Select" button are to:
Return slide from gate to tray for editing,
Allow tray to be rotated to any numbered slide position, or to "0" position for removal of tray from projector,
Allow slide opposite gate index to drop and be shown when button is released.

When "Select" button is depressed ALL THE WAY DOWN AND HELD, the select lever (2) moves cycle lever (3) to disengage drive pawl (4). The drive pawl engages drive gear (5) and cam stack starts to rotate.

The index lever (D) is pushed off its cam by select lever (2) blocking its movement.

All other levers operate as in first half of full cycle forward. Shutter (7) closes, slide lift lever (B) pushes slide into tray, and locator (9) pulls out of contact with lugs of tray.

With "Select" button still pressed ALL THE WAY DOWN, the drive pawl (4) is stopped by half cycle arm (not shown) of cycle lever, approximately 180 degrees from its starting position. The cam stack stops rotating and all lever action stops at this point.

When "Select" button is released, the half cycle arm of cycle lever releases drive pawl (4) and remaining half cycle is performed as in full cycle; locator (9) positions tray, slide lift lever (B) descends, pressure pads close, and shutter (7) opens.

SPECIFICATIONS

Forward and Reverse -- Proper operation of the forward and reverse buttons on remote control and projector housing:

1. Forward operation is controlled by momentary pressure all the way down on the "FOR." button, then release.
2. Reverse operation requires a slightly longer hold all the way down on the "REV." button, then release. If the pressure and release on the reverse button is quick or if it is not pushed all the way down, the slide tray may be tricked into advancing instead of reversing.
3. Solenoid should not be noisy and should be positive in action (see adjustment section).

Select Button -- The functions of the select button are to permit editing of a particular slide or manual rotation of tray. Button must not bind in down position.

1. The select button is not designed to advance the slide tray.
2. When select button is DEPRESSED ALL THE WAY and HELD:
   a. Slide being shown is raised back up into tray for editing or examination.
   b. Slide tray may be rotated by hand to any numbered slide position, either forward or backward. When button is released, slide opposite gate index will drop into gate and be shown.

Compliments of:
www.KodakParts.com

c. Slide tray may be rotated to "zero" and removed from the projector.

Emergency Clutch Release -- The emergency clutch release must actuate when any of the following are restricted in their initial movement: slide lift lever, tray locator, or tray indexer.

Automatic Timer -- Automatic operation is accomplished by setting the timer lever to 5, 8, or 15 seconds. The remote control unit is not required for automatic operation, but may be used for either forward or reverse actuation to override automatic operation.

Shutter -- The shutter should cover aperture during all movement of slides in gate.

Dielectric Test -- Projector must withstand electrical insulation test. Leakage current must not exceed 4.0 mA with 900V, 60 Hz, applied for one minute between the shorted prongs of the power plug and the frame, with the power switch in the lamp position.

The use of Tool #TL1513 performs the electrical insulation test. "Breakdown" and "Leakage" lamps should not light.

TESTS AND CHECKS

Power to the Cycle Solenoid - Test Points 10 and 11 -- 28V ac.

[For voltage checkpoints, see Electrical Diagram and Test Point Sheet (pages 52 and 54).]

Compliments of:
www.KodakParts.com

CHART OF DISASSEMBLY OF SLIDE TRANSPORT SYSTEM

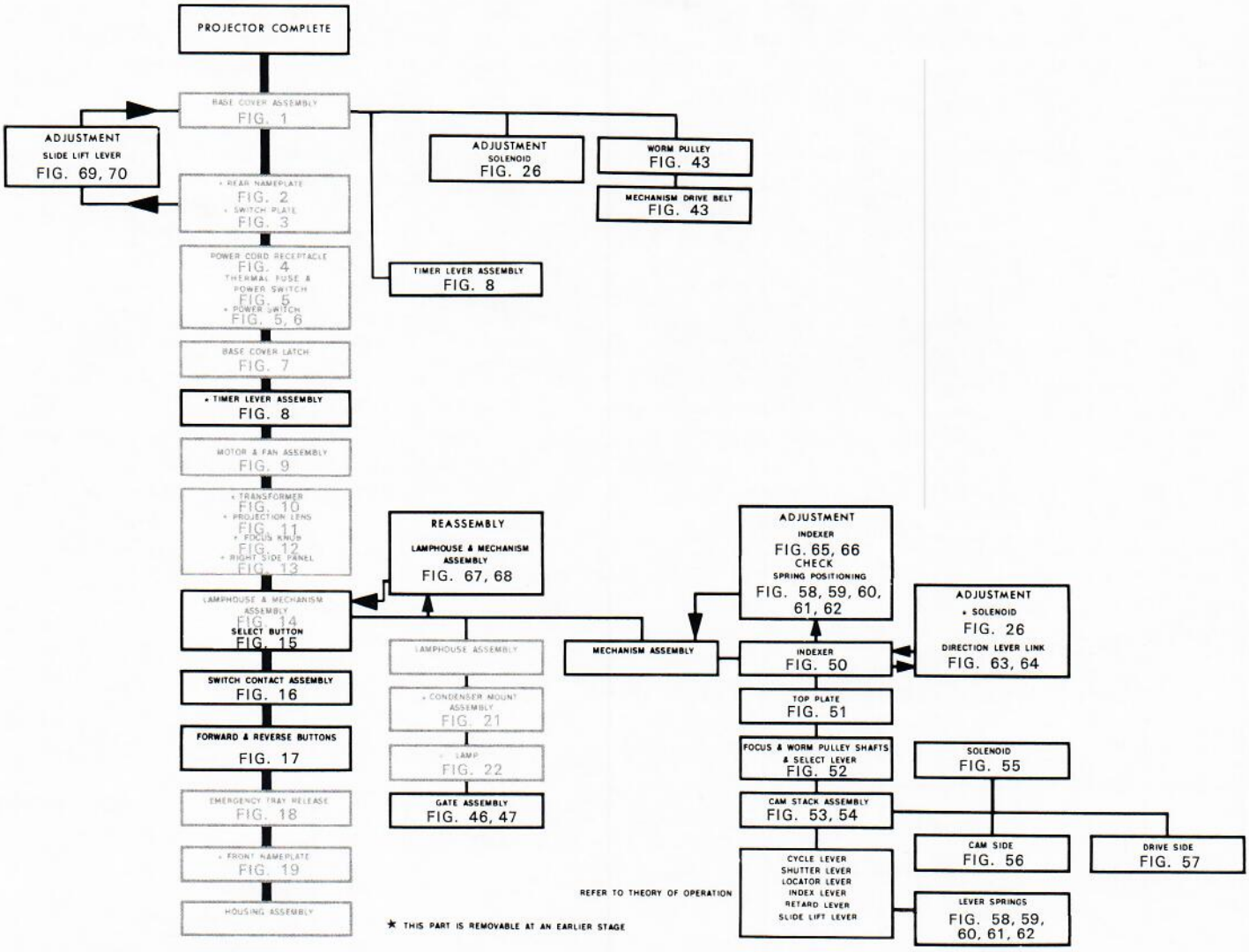

Compliments of:
www.KodakParts.com

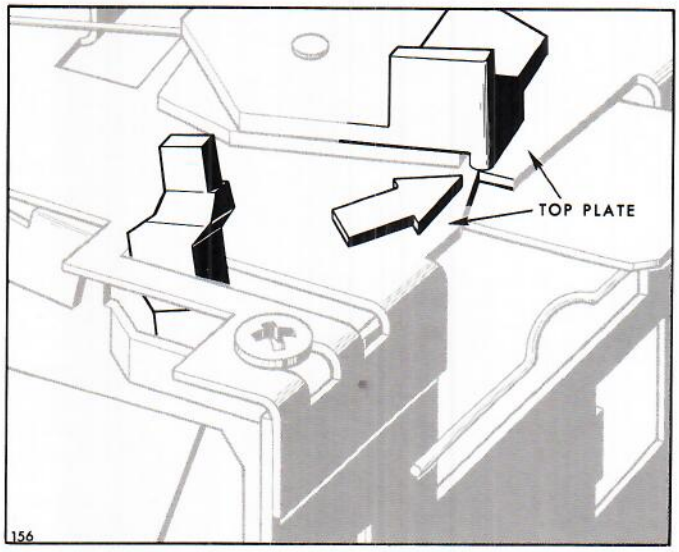

INDEXER

When cam stack has been rotated so indexer is at its farthest travel.

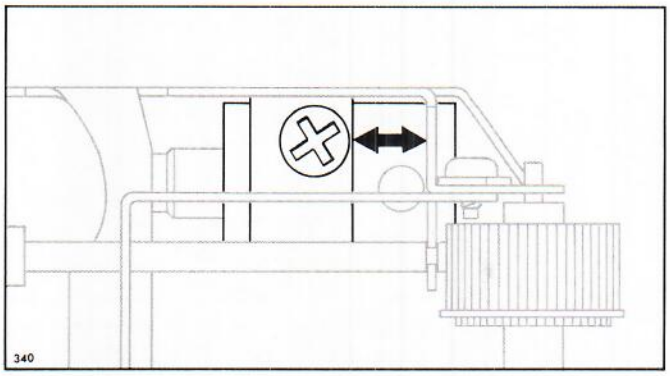

SOLENOID

Loosen screw; move solenoid either direction as required.

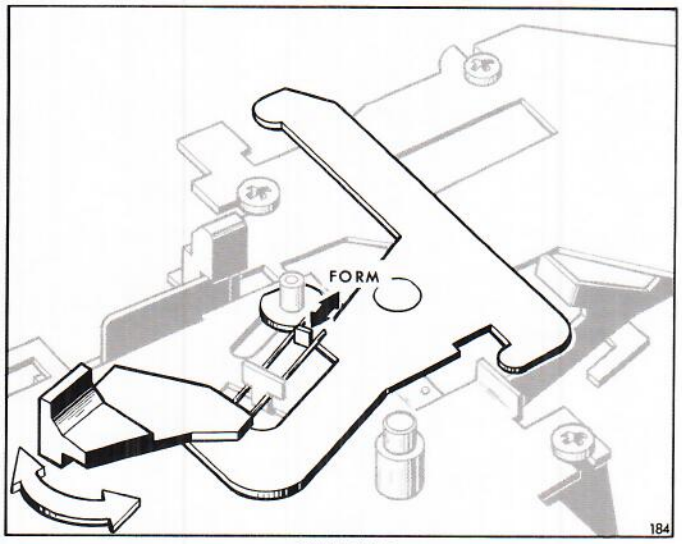

INDEXER

If alignment is not as shown in Figure 65, form neck of piece, as indicated, to move tip for proper alignment.

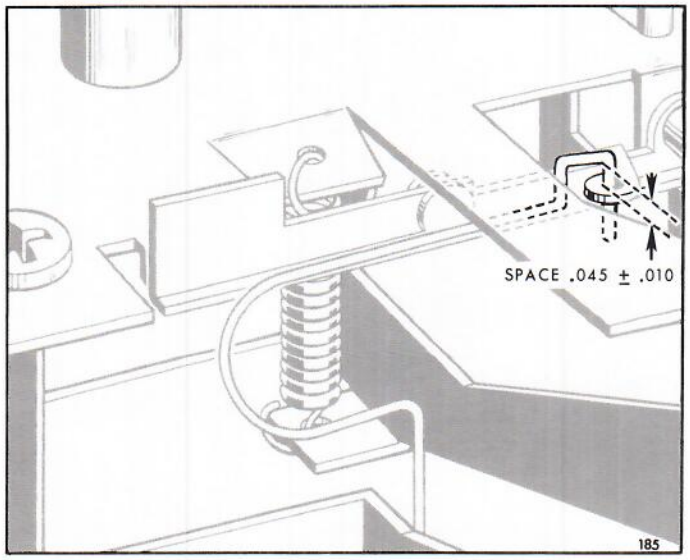

DIRECTION LEVER LINK

Adjust space as shown. Use arm on Forming Tool (Tool #TL1828).

Compliments of:
www.KodakParts.com

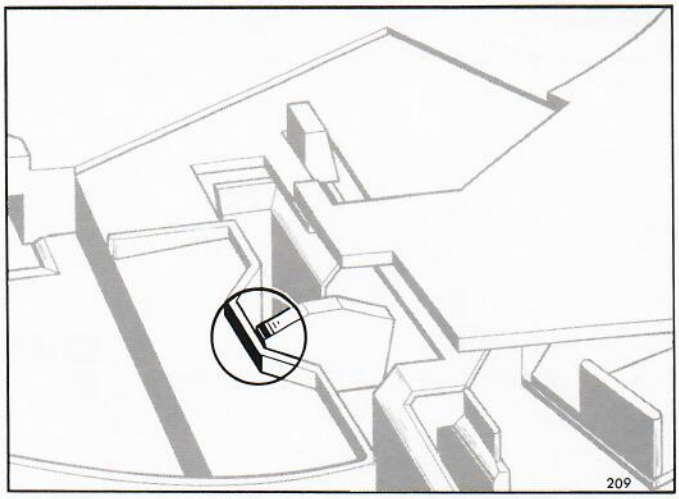

SLIDE LIFT LEVER

Operate projector to select position and shut off. Observe slide lift lever ramp; alignment should be as shown.

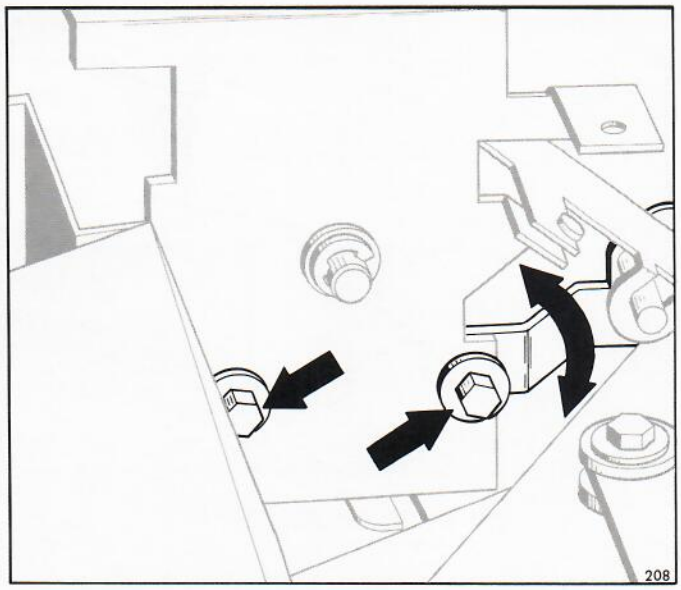

SLIDE LIFT LEVER

If alignment is not as shown in Figure 69, loosen screws slightly and move mounting bracket up or down to bring slide lift lever to proper alignment. Tighten screws.

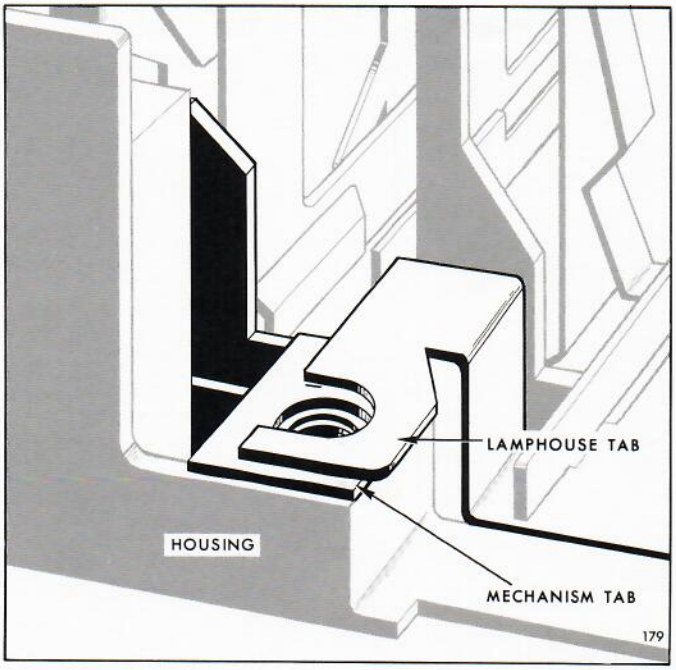

REASSEMBLY OF LAMPHOUSE AND MECHANISM ASSEMBLY

When reassembling, the mechanism tabs should be closer to the housing than the lamphouse tabs.

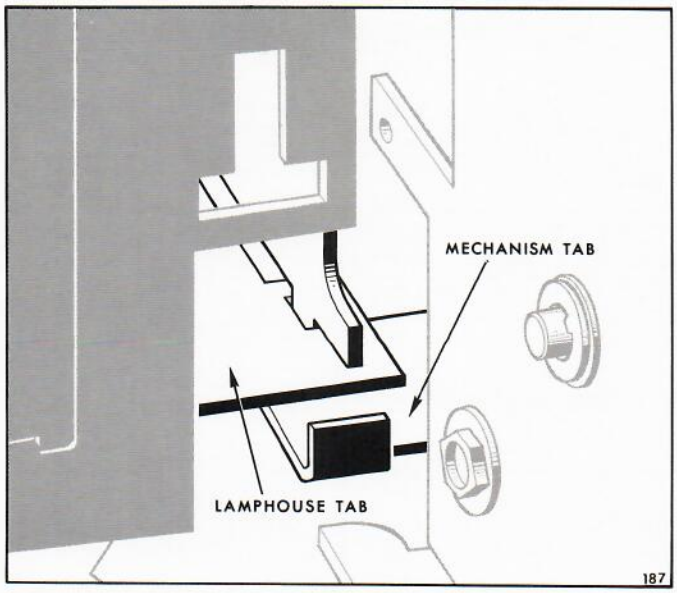

REASSEMBLY OF LAMPHOUSE AND MECHANISM ASSEMBLY

Compliments of:
www.KodakParts.com

LUBRICATION

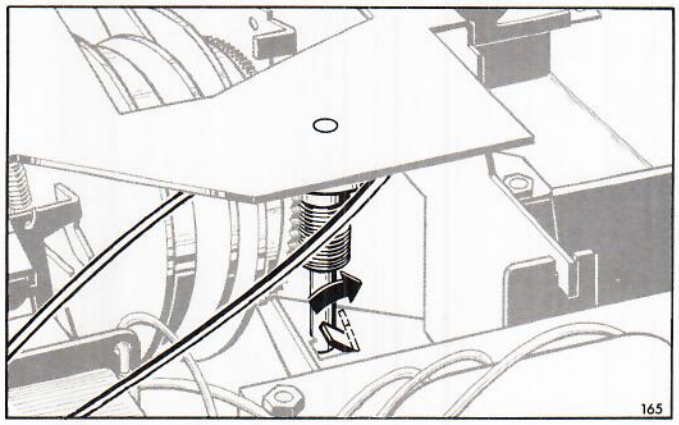

WORM PULLEY AND BELT

Form tab away from shaft. (Perform the forming slowly to prevent the tab from breaking off.)

Lubrication: Place small amount of lubricant (part No. 763002) on pulley shaft and on worm teeth.

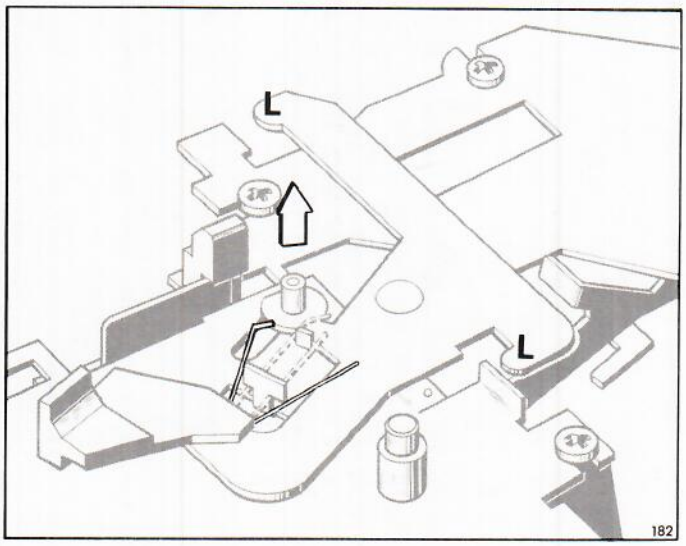

INDEXER

Spread spring and lift off.
Lubrication: Apply a thin coat of lubricant (part No. 763003) on the underside of two tabs labeled "L".

Compliments of:
www.KodakParts.com

TOOLS, CEMENTS AND LUBRICANTS

TOOLS

1. #TL1827 Focus test slide
2. #TL1828 Forming tool
3. #TL1829 Mechanism operating fixture (optional)
4. #TL1808 Auto-focus Range Gage

CEMENTS

Part No. 763098	3M SCOTCH-GRIP Cement
Part No. G135	Vulcalac

LUBRICANTS

Part No. 763001	SAE #20 Oil
Part No. 763002	Plastilube
Part No. 763003	Plastilube with 12% Moly

Compliments of:
www.KodakParts.com

ELECTRICAL CHECKPOINTS AND SPECIFICATIONS

WARNING: DANGEROUS VOLTAGE Use caution to make the following checks.

ELECTRICAL CHECKPOINTS

1. Main Power Supply -- 110-125V ac, 60 Hz -- Test Points 1 and 2
2. Continuity through Thermal Fuse -- Test Points 2 and 3 (Power off.)
3. Power to Main Motor -- 110-125V ac, 60 Hz -- Test Points 4 and 5
4. Power to Transformer -- 110-125V ac, 60 Hz -- Test Points 5 and 6
5. Transformer Output -- Test Points 7 and 8 -- 24V ac ± 10%
6. Power to Focus Motor -- Test Points 9 and 12 -- 28V ac ± 10%
7. Power to Cycle Solenoid -- Test Points 10 and 11 -- 28V ac ± 10%
8. Power to Auto-Focus System (Circuit Board) --

   Test Points 13 and 14 -- 30V ac ± 10%
   Test Points 15 and 16 -- 28V ac ± 10%

SPECIFICATIONS

Projector must withstand electrical insulation test. Leakage current must not exceed 4.0 mA with 900V, 60 Hz, applied for one minute between the shorted prongs of the power plug and the frame, with the power switch in the lamp position.

The use of Tool #TL1513 performs the electrical insulation test. "Breakdown" and "Leakage" lamps should not light.

Compliments of:
www.KodakParts.com

KODAK POCKET CAROUSEL 300 PROJECTOR

SCHEMATIC DIAGRAM

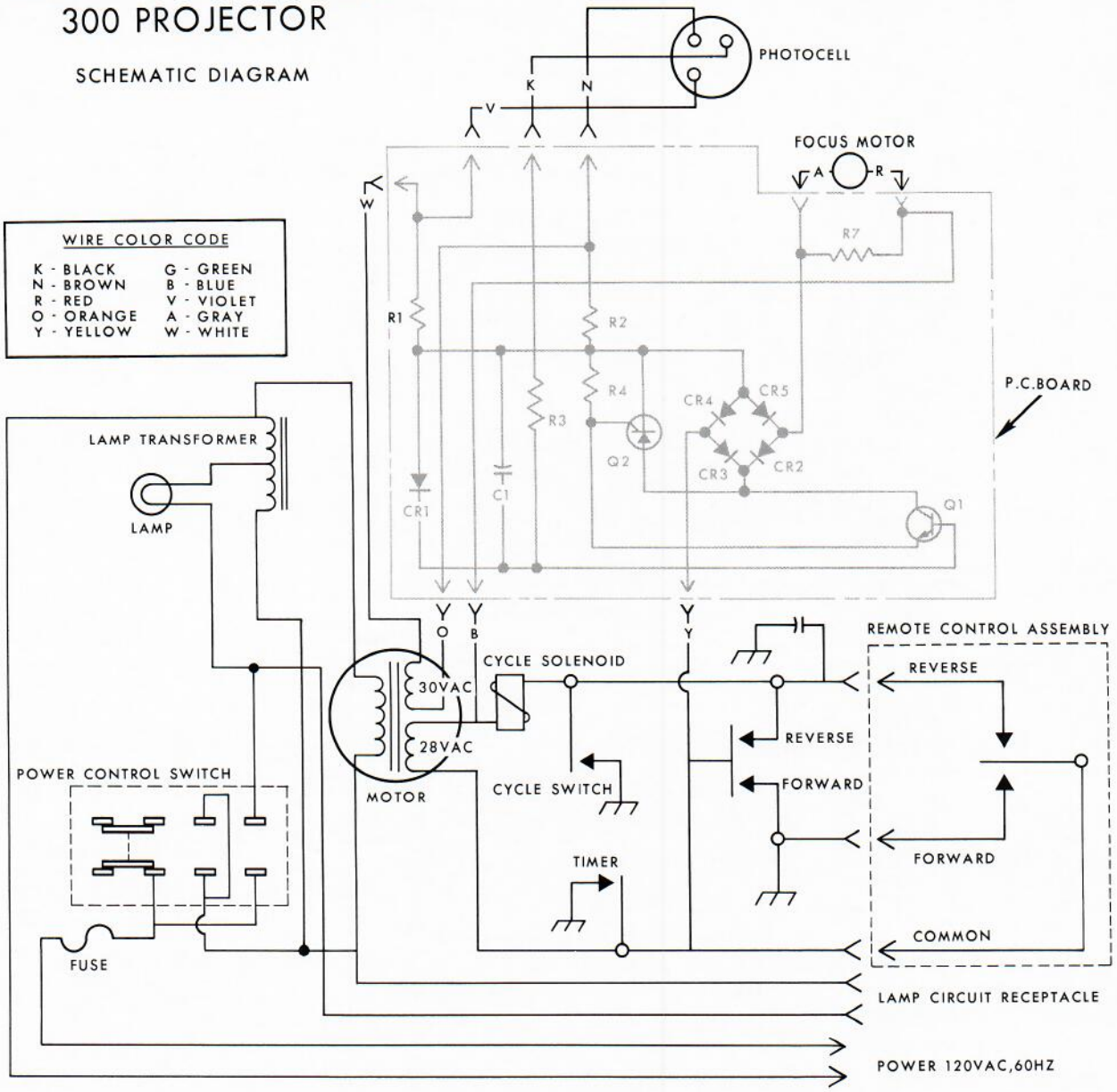

WIRE COLOR CODE

K - BLACK	G - GREEN
N - BROWN	B - BLUE
R - RED	V - VIOLET
O - ORANGE	A - GRAY
Y - YELLOW	W - WHITE

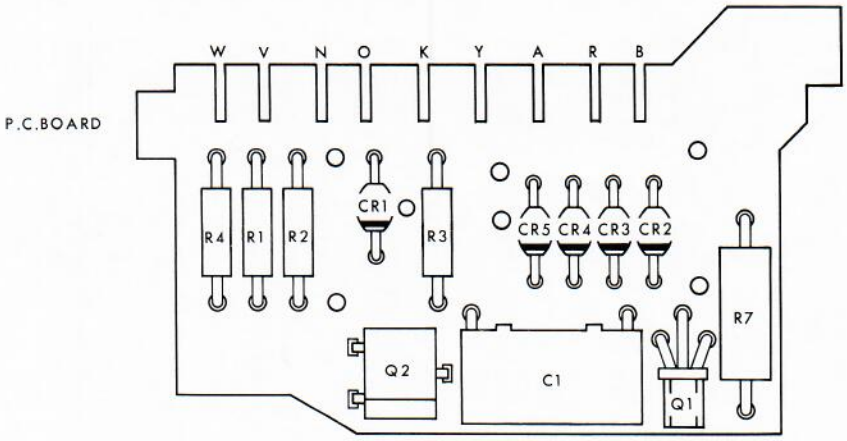

Compliments of:
www.KodakParts.com

KODAK Pocket **CAROUSEL** 300 Projector

ELECTRICAL DIAGRAMS

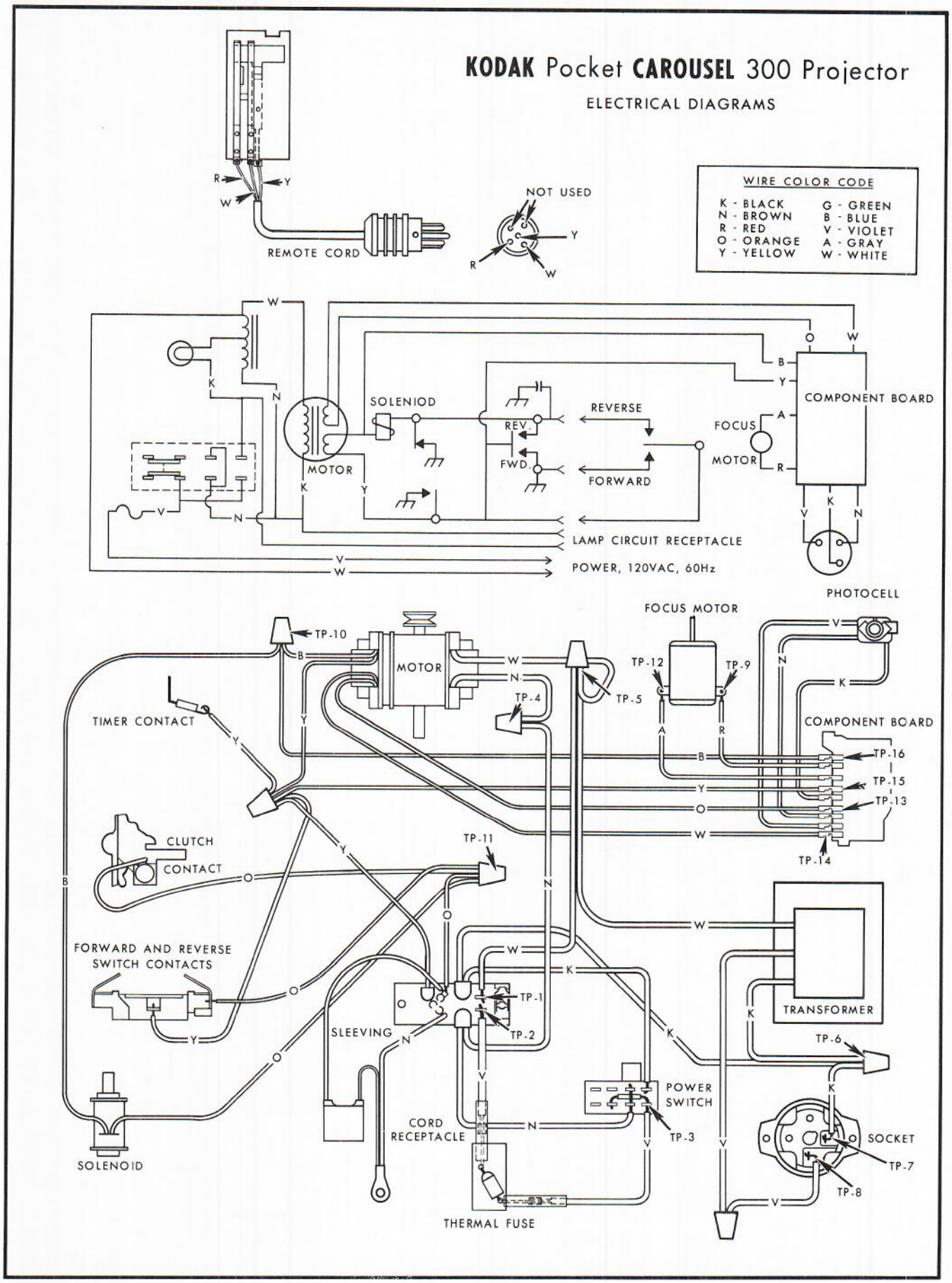

Compliments of:
www.KodakParts.com

Compliments of:
www.KodakParts.com

Publication No. 775147
10/72 B

Printed in the United States of America